CS 455: Introduction To Distributed Systems [Networking]

Encapsulation and Layering

Packets grow with headers and trailers
- As they trickle down successive layers

A small price to pay
- For keeping complexity at bay

Shrideep Pallickara
Computer Science
Colorado State University

1

Topics covered in today's lecture

- Encapsulation
- OSI
- Internet Architecture
- IP routing

2

ENCAPSULATION

3

Example of a protocol graph

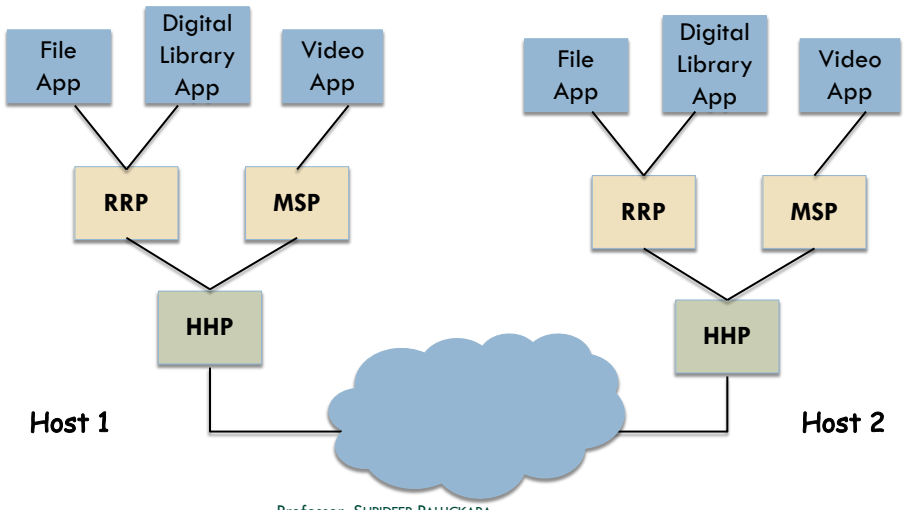

4

Encapsulation

- RRP receives a set of bytes to transmit from the application
  - E-mail, integers, images etc
- RRP is responsible for sending this data to its peer at the other end
  - Must communicate **control information** to its peer
  - Instruct how to **handle** the message

When asked to transmit info, lower level layers add information to the message

- Attach a **header** to the message
  - Small data structure
  - Few bytes to several dozen bytes
- Control info at the end of message: **trailer**
- Format is specific to the protocol
- Data being transmitted: body or **payload**
- Application data is said to be **encapsulated**

Encapsulating high-level messages inside low-level messages

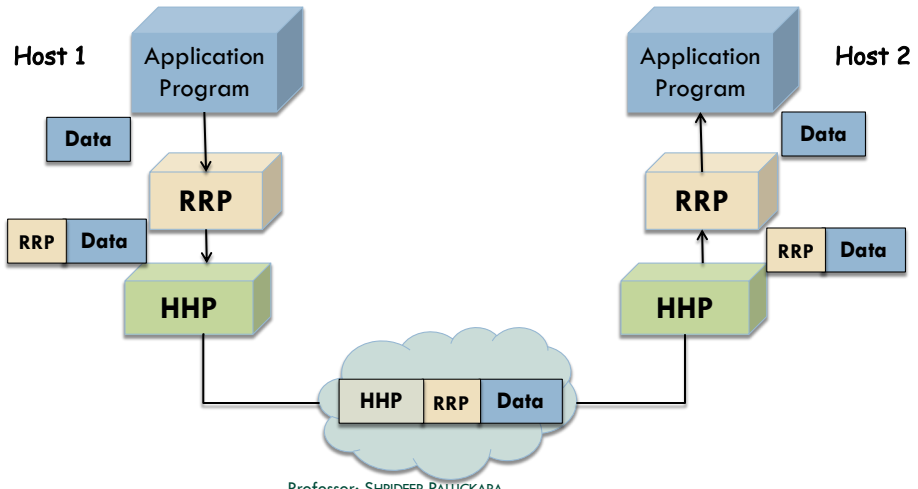

Encapsulation: Some more info

- Low-level protocol does not **interpret** message given to it by high-level protocol
  - *Cannot extract* meaning
- Low-level protocol may apply simple **transformations** to the data it is given
  - Compress
  - Encrypt

Multiplexing is applicable up-and-down the protocol graph too

- RRP attaches header to every message that goes through it
  - Header includes information to identify the application
    - Called demultiplexing key or **demux key**
- At the destination host, RRP strips its header
  - Examines demux key
  - Demultiplexes message to correct application

Demux key is used at all levels of the protocol stack

- Some use an 8-bit field {**TCP** (6), **UDP** (17)}
  - Can support only 2^8 (256) high level protocols
  - Can also be 16/32-bits
- There could be a **single** demultiplexing field
  - Same demux key used at both ends
- There could be a **pair** of demultiplexing fields
  - Each side uses different key to identify high-level protocol

OSI NETWORK ARCHITECTURE

11

OSI network architecture

- Model is a product of the Open Systems Interconnection (OSI) project
  - At the International Organization for Standardization (ISO)
- Partitions network functionality into **7 layers**
- Physical Layer
  - Handles transmission of **raw bits**
  - Standardizes electrical, mechanical, and signaling interfaces
    - `0` bit should be received as `0` not `1`

12

OSI network architecture: Data link Layer

- Collects stream of bits into a **frame**
  - Puts special *bit pattern* at the start/end of each frame
  - Frames, not raw bits, are delivered to host
- Compute **checksum** for frame
  - Check for correctness and request retransmission
- Network adaptors & device drivers implement this

OSI network architecture

- Network layer
  - Handles routing among nodes in a **packet-switched** network
  - Unit of data exchanged is **packet** not frames
- Layers implemented on all network nodes?
  - Physical, data and network

OSI Architecture

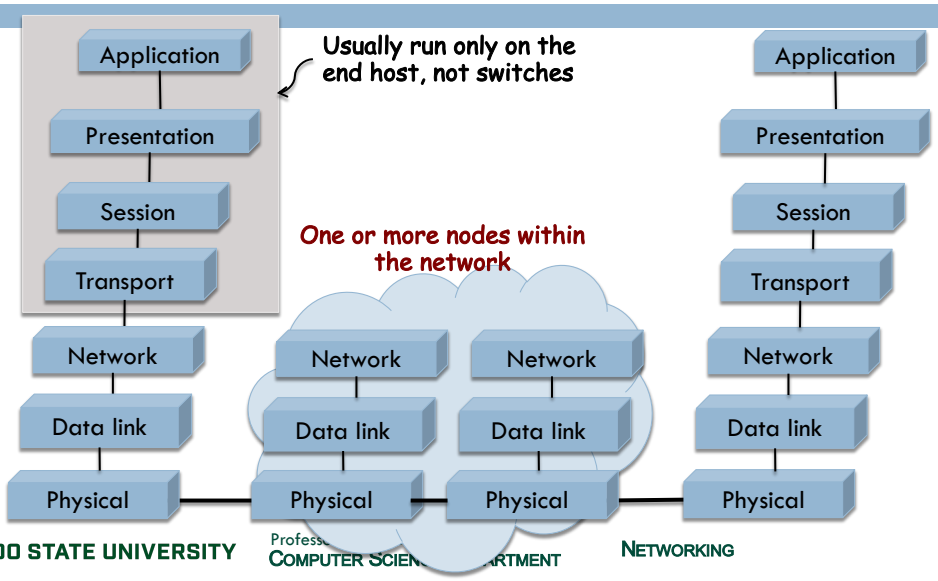

15

How messages flowing through the OSI stack will appear on the network

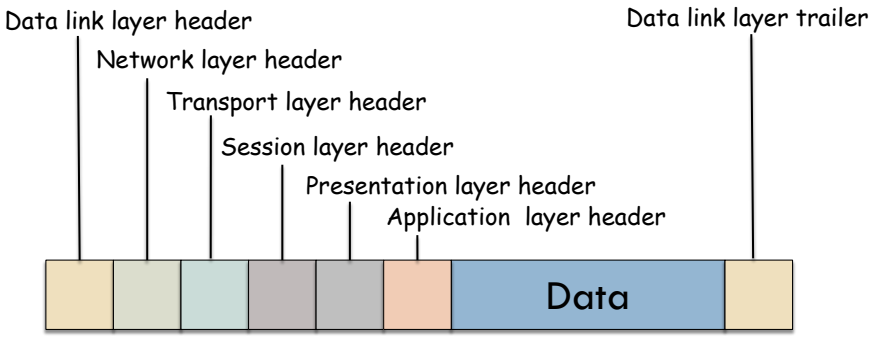

16

OSI network architecture

- Transport
  - Implements process-process **channel**
  - **Messages** {not packet or frame}
- Presentation
  - **Format** of data exchanged between peers
- Session
  - **Namespace** to tie different transport-streams that are part of the application

INTERNET ARCHITECTURE

Internet architecture

- Evolved out of experiences with ARPANET
  - Funded by ARPA of the US DoD
- Around *before* the OSI architecture
- Unlike OSI, this is a **4-level** model

Internet protocol graph

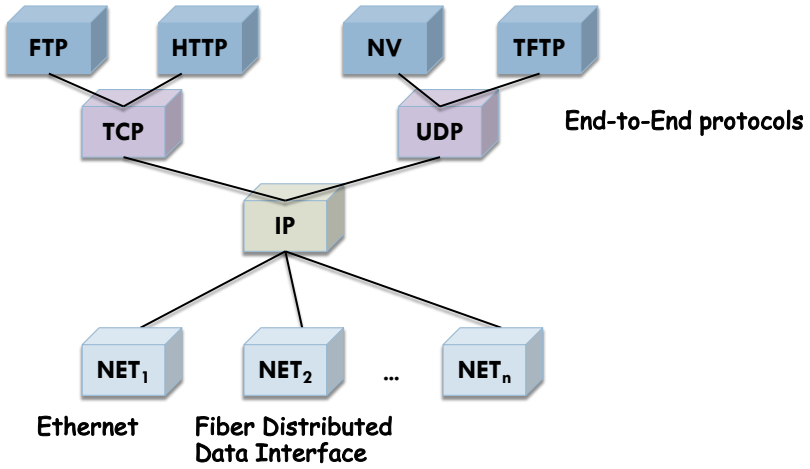

Alternative view of the Internet Architecture

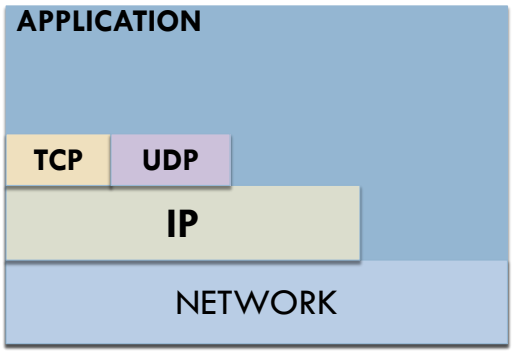

Internet architecture

- DOES NOT imply strict layering
  - Bypassing immediate lower layers is possible
- Layer has an **hour-glass** shape
  - Wide at top and bottom
  - Narrow in the middle
  - **IP** is the **focal point** of the architecture

Protocol implementation issues
Where are the processes?

- Process-per-protocol
- Process-per-message

Protocol implementation issues
Process-per-protocol model

- Each protocol implemented in *separate* process
- Process/protocol passes message to another process/protocol
- **Context-switch** required at each level of the protocol graph
  - Expensive!

Process-per-message model: Associate processes per message

- Treat each protocol as a **static** piece of code
- Protocol graph **traversed in sequence** of procedure calls
- When message arrives:
  - Dispatch process to move message up the protocol graph
  - At each level procedure implementing protocol is **invoked**
- Sending message?
  - Application process invokes appropriate procedures

Comparison

- Process-per-protocol
  - Context switch per level
- Process-per-message
  - Procedure call per level

INTERNETWORKING

27

Internetwork

- Arbitrary collection of **interconnected** networks
  - To provide some sort of host-host packet delivery service
- Network of networks
  - Made up of lots of smaller networks

28

A simple internetwork

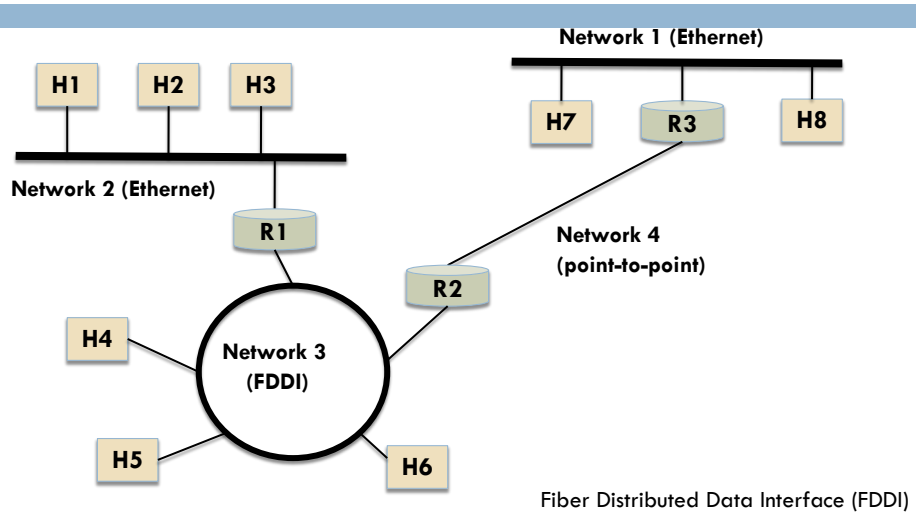

Fiber Distributed Data Interface (FDDI)

Internet Protocol (IP)

- Key tool to build scalable, **heterogeneous** networks
- Runs on all nodes (hosts and routers)
- Allows nodes and networks to *function as a single logical network*
- Possible to build an internetwork without IP
  - But IP is the only one that has faced scale issues

A simple internetwork: Communication between H1-H8

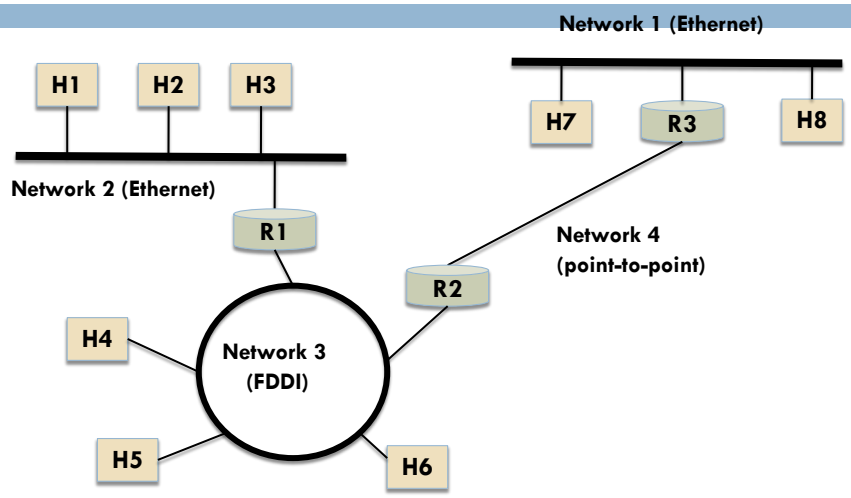

Example depicting how hosts (H1-H8) are logically connected

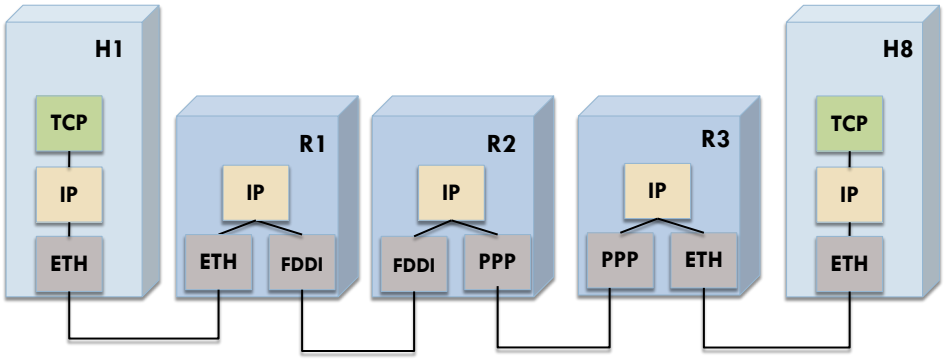

The IP service model

- Datagram model of **delivery**
  - Connectionless
  - Best effort
- **Addressing** scheme
  - Identifies all hosts in the internetwork

Datagram delivery

- Datagram is a type of packet
  - Sent in a **connectionless** fashion
- No need for any *advance* setup mechanisms
  - That tell network what do when packet arrives
- Every datagram contains enough information
  - To forward packet to correct destination

The network makes a best effort to send datagrams across

- Things that could go **wrong** with the packets
  - Lost
  - Corrupted
  - Misdelivered
  - Out of order and duplicates
- When things go wrong, the network does **nothing**
  - No attempt to recover from the failure

Keeping routers simple was one of the original design goals of IP

- Important to **run over anything**
- Putting extra functionality into routers to make up for network deficiencies?
  - Not a good idea
- Higher-level protocols/apps that run above IP need to be aware of failure modes

The IP Packet format consists of a header followed by bytes of data

- Represented as a succession of **32-bit** words
- Packet formats designed to align on 32-bit boundaries
  - Simplifies task of processing in software
- Transmission order
  - ***Top word*** transmitted first
  - ***Leftmost byte*** of each word transmitted first

The IPv4 packet header

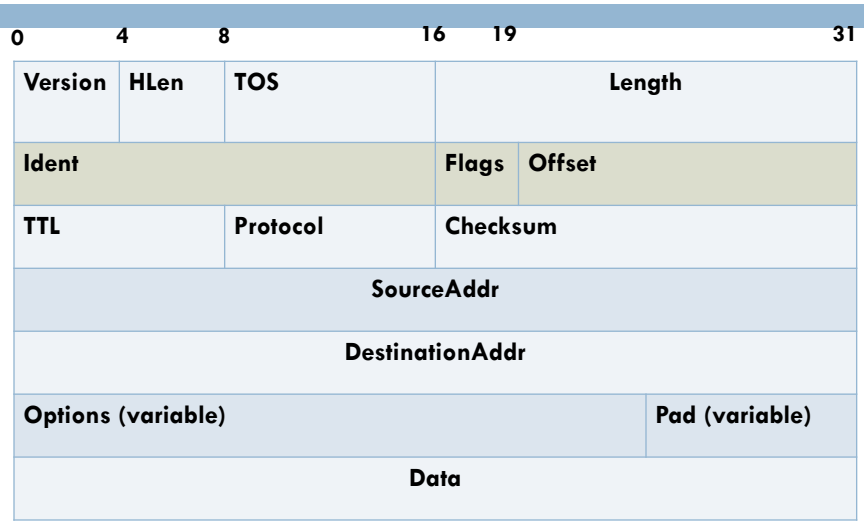

IP Packet format [1/5]

- **Version**
  - Makes it easy to **redefine** packet format later on
- **HLen**
  - Specifies length of header **in 32-bit words**
  - When there are no options (most of the time)
    - Header is **5 words** or 20 bytes
- **TOS** (type of service)
  - Allow packets to be treated differently
    - Based on application needs

IP Packet format [2/5]

- **Length**
  - Length of the datagram **in bytes**
  - Maximum size of IP datagram is 2^{16} bytes
- SECOND WORD OF IP PACKET
  - {Ident, Flags, Offset}
  - Information about **fragmentation**

IP Packet format [3/5]

- **TTL** (time to live)
  - Hop-count not timer (as originally intended)
- **Protocol** field
  - **Demultiplexing** key
    - Identifies higher-level protocol
    - TCP (6), UDP (17)
- **Checksum**
  - Consider IP header as a sequence of 16-bit words

IP Packet format [4/5]

- **SourceAddr**
  - Decide if packet should be accepted
  - Also used for replies
- **DestinationAddr**
  - Full address of destination
  - Forwarding decisions are made at each router
- Presence or absence of **options**
  - Can be checked **based on size of HLen**

IP Packet format [5/5]
TOS field {Type of Service}

- Meant to specify ***how*** the datagram should be ***handled*** as it traversed the internet
  - Preference for low delay
  - Preference for high throughput
  - Preference for high reliability
- In practice TOS was <u>not widely implemented</u>

The 8 bits allocated to TOS can be divided into 5 parts

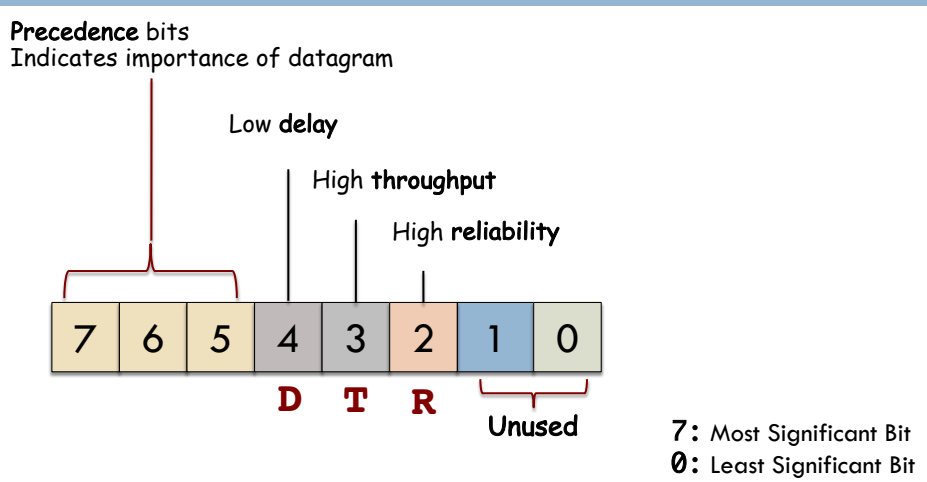

Providing host-to-host service model over heterogeneous collection of networks

- Each network technology has its own idea of how large a packet can be
  - Ethernet v2: 1500 bytes
  - FDDI: 4500 bytes

Every network type has a Maximum Transmission Unit (MTU)

- Largest IP datagram that it can carry in its frame
- Smaller than the largest packet-size of network
  - IP datagram needs to fit in payload of **link-layer frame**

Ethernet Packet Layout

Bytes:	7	1	6	6	2	46 < Length < 1500	4
	Preamble	S	Destination address	Source address	Length Of data	Data for Transmission	Checksum

Preamble bit pattern: 10101010

Single Byte start (**S**) frame delimiter: 10101011

Fragmentation necessary when datagram path includes network with smaller MTU

- All fragments carry same identifier in **Ident** field
  - To enable fragment reassembly
  - Chosen by the source host
- If all fragments do not arrive at receiving host?
  1. Receiver ***gives up*** reassembly [reassembly timeout: 15 seconds RFC0791]
  2. ***Discards*** fragments that did arrive
- IP **does not attempt** to recover from missing fragments

A simple internetwork: Sending IP datagrams from H1 to H8

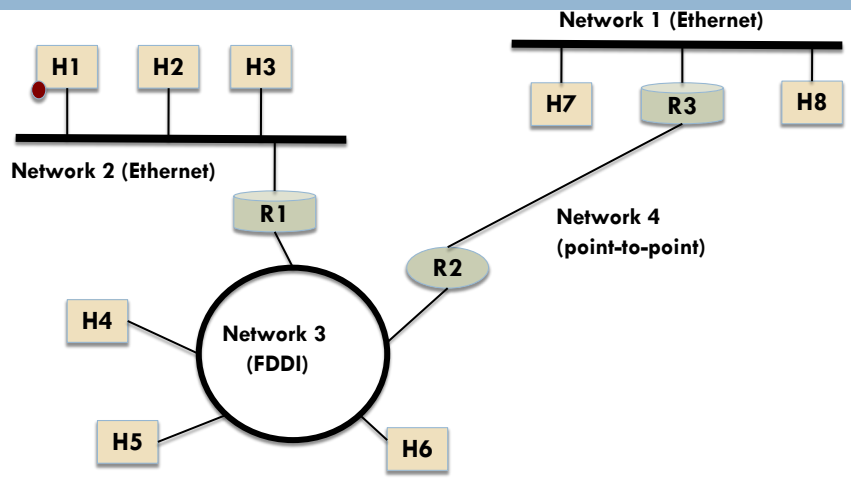

IP datagrams traversing a sequence of physical networks

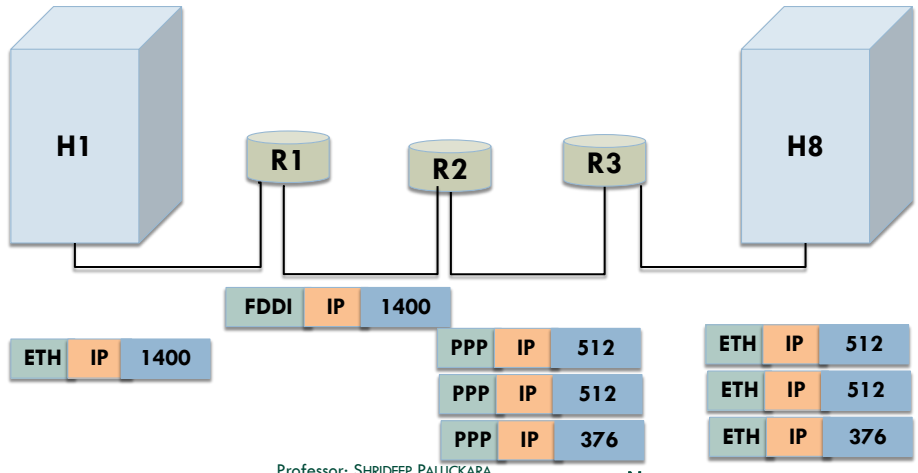

IPv4 Packet header

0 4 8 16 19 31

Version	HLen	TOS	Length	
Ident			Flags	Offset
TTL		Protocol	Checksum	
SourceAddr				
DestinationAddr				
Options (variable)				Pad (variable)
Data				

Header fields used in IP fragmentation:

Fragmentation occurs at 8-byte boundaries

Start of header				
Ident = x	0	DF	0	Offset = 0
Rest of header				
1400 data bytes				

Unfragmented packet

Start of header				
Ident = x			1	Offset = 0
Rest of header				
512 data bytes				

Fragmented packet

Header fields used in IP fragmentation:

Fragmentation occurs at 8-byte boundaries

Start of header				
Ident = x			1	Offset = 64
Rest of header				
512 data bytes				

Fragmented packet

Start of header				
Ident = x			0	Offset = 128
Rest of header				
376 data bytes				

Fragmented packet

IPv6 (AND COMPARING WITH IPv4)

IPv6 versus IPv4: Key Differences

- Source and destination addresses are **128-bits** (16 bytes) in IPv6
- IPv6 treats Options as **extension headers**
- To simplify processing of packets in routers, IPv6 **did away with fragmentation**
  - Responsibility for packet fragmentation is at the end points
  - IPv6 hosts must perform : (1) path MTU discovery, (2) perform end-to-end fragmentation, OR (3) send packets no larger than the default MTU=**1280**
- As of 2014, IPv4 still carried >99% of worldwide Internet traffic

IPv6 Packet Header

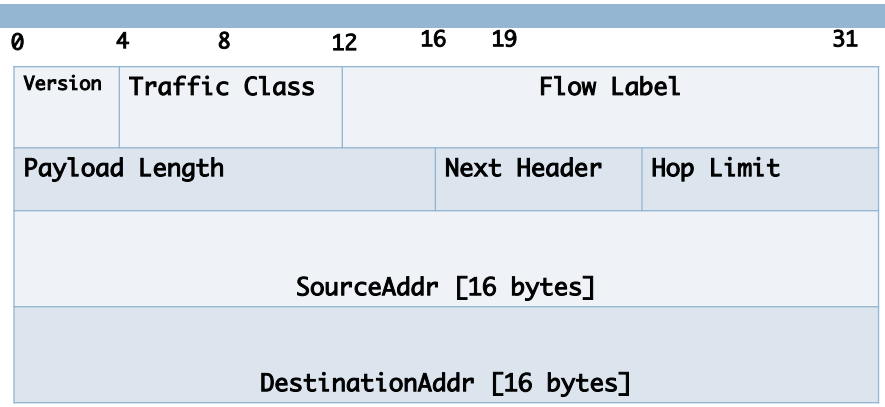

IPv6 Packet Header is fixed at 40 bytes ... So there is no Header Length

IPv6 Packet Header: Some more details [1/2]

- **Version**: 4 bits [0110]
- Traffic Class: 6+2 bits
  - Differentiated Services for QoS
  - Anything that ends in 2 "1" bits is intended for experimental or local use
- Flow Label (20 bits)
  - If it is non-zero: Serves as a hint to routers and switches with multiple outbound paths that these **packets should stay on the same path**, so that they will not be reordered
- Payload length (**16 bits**): Size of payload *including* extension headers

IPv6 Packet Header: Some more details [2/2]

- Next Header (8 bits)
  - Specifies the type of the next header
- Hop Limit (8 bits)
  - Replaces the time-to-live field of IPv4
- Destination and Source Addresses (**128-bits** or 16 bytes each)
- Note: The IPv6 packet **header has no checksum**
  - Transport or application layer protocols are assumed to provide sufficient error detection

Structure of the IPv6 Packet

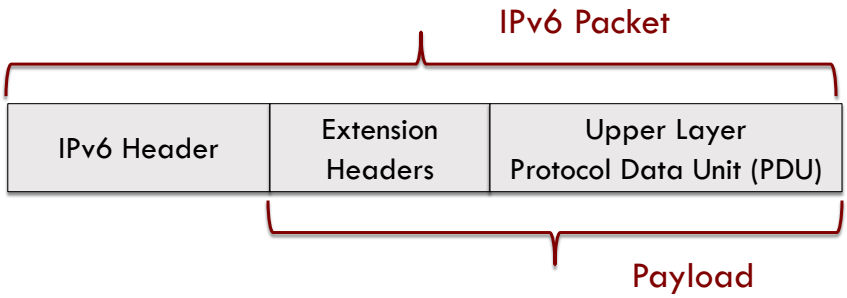

PDU typically contains an upper layer protocol header and its payload.
For e.g.: a TCP segment, UDP Datagram, or an ICMPv6 message

Extension Header

- If the `Next Header` field is non-zero
  - It defines an extension header
- Current extension header types
  - Information for routers, route definition, fragment handling, authentication, encryption, etc.
- Each extension header has a specific size and defined format
- If an extension header is present?
  - **Follows** the basic header and **precedes** the payload AND
  - Includes a `Next Header`

IPv6 Extension Headers: The chain of pointers using the Next Header field

Each extension header must fall on a 64-bit (8-byte) boundary. Use Padding to get there if less than that.

IPv6 Header Next Header=6 (TCP)	TCP Segment

IPv6 Header Next Header=43 (Routing)	Routing Header Next Header=6 (TCP)	TCP Segment

IPv6 Header Next Header=43 (Routing)	Routing Header Next Header=51 (AH)	Authentication Header Next Header=6 (TCP)	TCP Segment

Fragmentation Header: 44

The contents of this slide-set are based on the following references

- *Computer Networks: A Systems Approach. Larry Peterson and Bruce Davie. 4th edition. Morgan Kaufmann. ISBN: 978-0-12-370548-8. Chapter [4]*