Peer Instruction #4:
Logic and State Machines

What will happen to the output of the gate shown below when Input1 is 1 and Input 2 is 1?

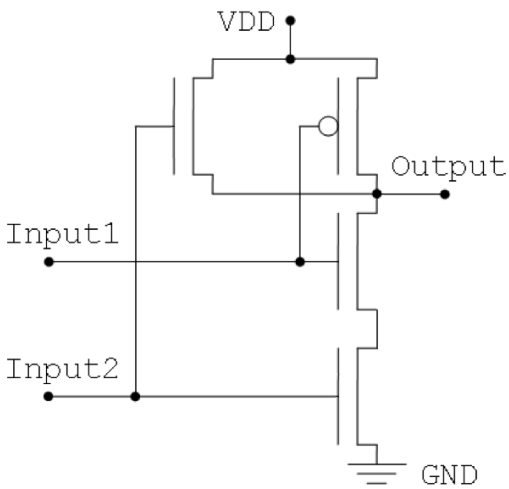

A. Connected to ground (0)
B. Connected to power (1)
C. Connected to both (!)
D. Disconnected (x)
E. None of the above

Gates

What is the column of the truth table for the Output signal, in binary order for Input1 and Input 0 of 00, 01, 10, 11?

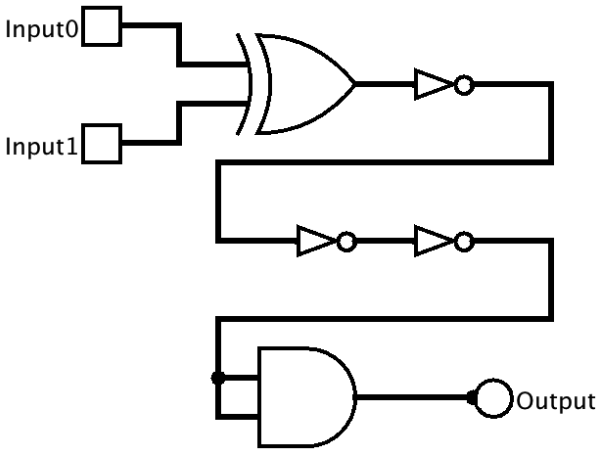

A. 0, 1, 1, 0
B. 1, 0, 0, 1
C. 1, 1, 1, 0
D. 0, 0, 0, 1
E. None of the above

Combinational Logic

Which output signal is asserted for all possible values for for Input1 (most significant) and Input 0 (least significant) in binary order 00, 01, 10, 11?

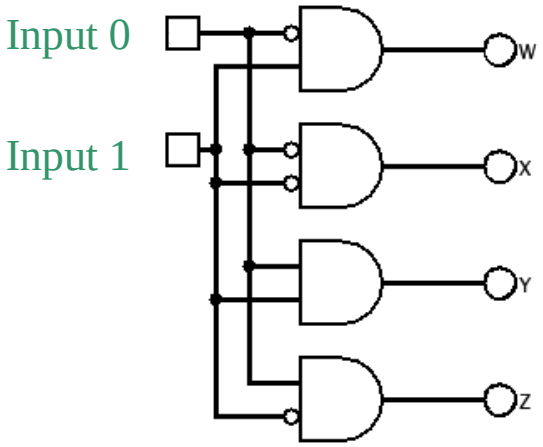

A. W, X, Y, Z
B. X, W, Z, Y
C. Y, Z, W, X
D. X, Z, W, Y
E. None of the above

Combinational Logic

After RESET, which state will the machine shown below end up in if the inputs are 1, 0, 1, 1, 1, 0, 1

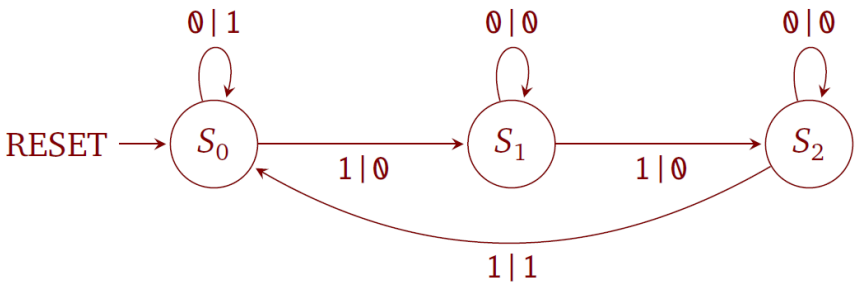

A. S_0
B. S_1
C. S_2
D. None of the above

State Machines

Will the following C program segment print the array elements in order, separated by colons, i.e. “6:7:8”?

```
int array[3] = {6, 7, 8};
printf("%d:", array[0]);
printf("%d:", *(&array[1]));
printf("%d\n", *(array+2));
```

A. Yes
B. No
C. Will not compile
D. Hard to say!

Arrays and Pointers

Are lines 1 and 2 functionally equivalent to lines 3 and 4 in the program shown below?

```
1: int a [3];
2: *a++ = 7; *a++ = 8; *a++ = 9;
3: int *b = malloc(3 * sizeof(int));
4: b[0] = 7; b[1]  = 8; b[2] = 9;
```

A. Yes B. No C. Almost

Arrays and Pointers