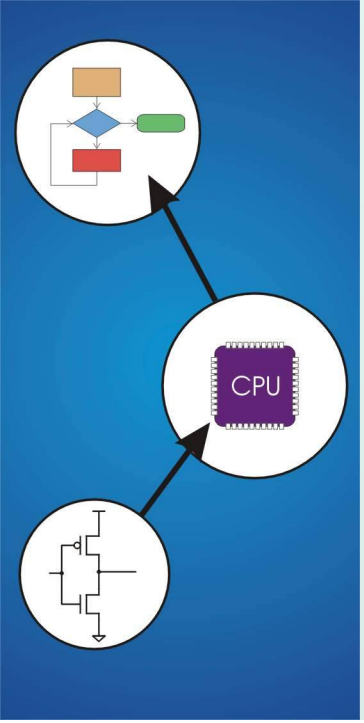

Chapter 14
Functions

Original slides from Gregory Byrd, North Carolina State University

Modified slides by Chris Wilcox, Colorado State University

Function

- Smaller, simpler, subcomponent of program
- Provides abstraction
  - hide low-level details, give high-level structure
  - easier to understand overall program flow
  - enables separable, independent development
- C functions
  - *not* methods—no objects, here!
  - zero or multiple arguments passed in
  - single result returned (optional)
  - return value is always a particular type
- In other languages, called procedures, subroutines, ...

Example of High-Level Structure

```
int main()
  {
    SetupBoard(); /* place pieces on board */
    DetermineSides(); /* choose black/white */

    /* Play game */
    do {
      WhitesTurn();
      BlacksTurn();
    } while (NoOutcomeYet());
  }
```

Structure of program is evident, even withou knowing implementation.

Functions in C

- Declaration (also called prototype)

```
int Factorial(int n);
```

type of return value | name of function | types of all arguments

- Function call -- used in expression

```
a = x + Factorial(f + g);
```

1. evaluate arguments
2, execute function
3. use return value in expression

Function Definition

- State type, name, types of arguments
  - must match function declaration
  - give name to each argument (doesn't have to match declaration)

```
int Factorial(int n)
{
  int i;
  int result = 1;
  for (i = 1; i <= n; i++)
     result *= i;
  return result;
}
```

gives control back to calling function and returns value

Why Declaration?

- Since function definition also includes return and argument types, why is declaration needed?
- Use might be seen before definition. Compiler needs to know return and arg types and number of arguments.
- Definition might be in a different file, written by a different programmer.
  - include a "header" file with function declarations only
  - compile separately, link together to make executable

Example

```
double ValueInDollars(double amount, double rate);
int main()
{
    ...
    dollars = ValueInDollars(francs,
                             DOLLARS_PER_FRANC);
    printf("%f francs equals %f dollars.\n",
           francs, dollars);
    ...
}
double ValueInDollars(double amount, double rate)
{
  return amount * rate;
}
```

function declaration (prototype)

function call (invocation)

function definition (code)

Implementing Functions: Overview

- Activation record (stack frame)
  - information about each function, including arguments and local variables
  - stored on run-time stack

Calling function

```
push new activation
  record
copy values into
  arguments
call function

get result from stack
```

Called function

```
execute code
put result in
  activation record
pop activation record
  from stack
return
```

Run-Time Stack

- Recall that local variables are stored on the run-time stack in an *activation record*
- Stack Pointer (R6) is a pointer to the next free location in the stack, and is used to push and pop values on and off the stack.
- Frame pointer (R5) is a pointer to the beginning of a region of the activation record that stores local variables for the current function
- When a new function is called, its activation record is pushed on the stack; when it returns, its activation record is popped off of the stack.

Run-Time Stack

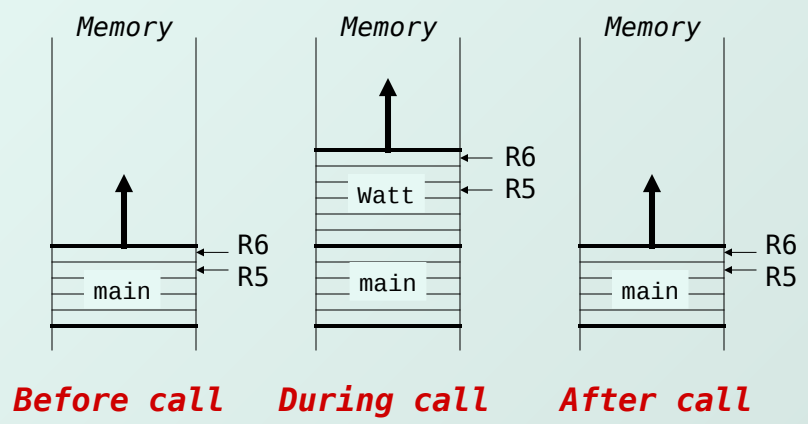

Activation Record

```
int NoName(int a, int b)
{
  int w, x, y;
  .
  .
  .
  return y;
}
```

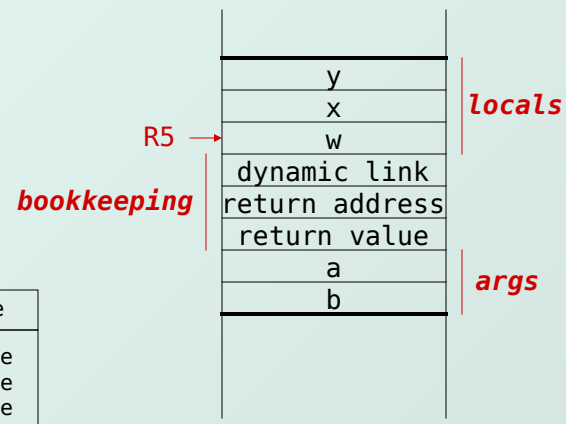

Name	Type	Offset	Scope
a	int	4	NoName
b	int	5	NoName
w	int	0	NoName
x	int	-1	NoName
y	int	-2	NoName

Activation Record Bookkeeping

- Return value
  - space for value returned by function
  - allocated even if function does not return a value
- Return address
  - save pointer to next instruction in calling function
  - convenient location to store R7 in case another function (JSR) is called
- Dynamic link
  - caller's frame pointer
  - used to pop this activation record from stack

Example Function Call

```
int Volta(int q, int r)
{
  int k;
  int m;
  ...
  return k;
}

int Watt(int a)
{
  int w;
  ...
  w = Volta(w,10);
  ...
  return w;
}
```


Calling the Function

```
w = Volta(w, 10);
; push second arg
AND  R0, R0, #0
ADD  R0, R0, #10
ADD  R6, R6, #-1
STR  R0, R6, #0
; push first argument
LDR  R0, R5, #0
ADD  R6, R6, #-1
STR  R0, R6, #0
; call subroutine
JSR  Volta
```

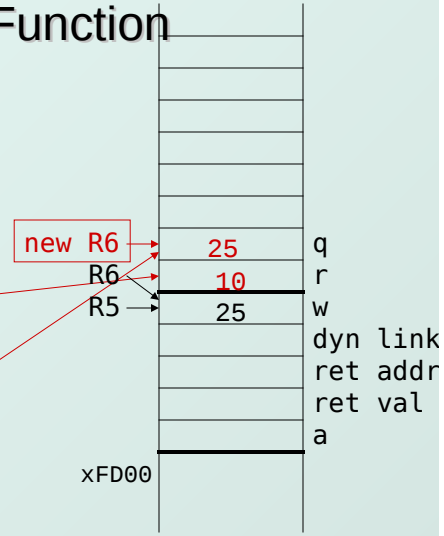

Note: Caller needs to know number and type of arguments, doesn't know about local variables.

Starting the Callee Function

```
; leave space for return value
ADD  R6, R6, #-1
; push return address
ADD  R6, R6, #-1
STR  R7, R6, #0
; push caller's frame ptr
ADD  R6, R6, #-1
STR  R5, R6, #0
; set new frame pointer
ADD  R5, R6, #-1
; allocate space for locals
ADD  R6, R6, #-2
```

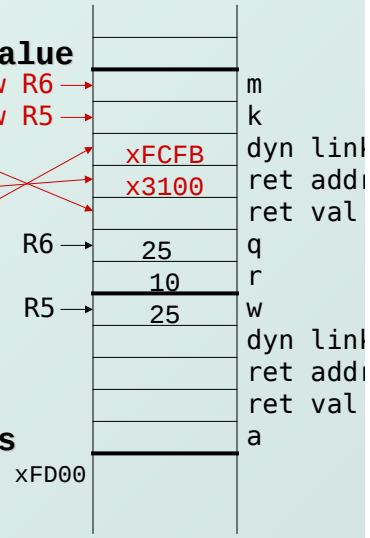

Ending the Callee Function

```
return k;
; copy k into return value
LDR  R0, R5, #0
STR  R0, R5, #3
; pop local variables
ADD  R6, R5, #1
; pop dynamic link (into R5)
LDR  R5, R6, #0
ADD  R6, R6, #1
; pop return addr (into R7)
LDR  R7, R6, #0
ADD  R6, R6, #1
; return control to caller
RET
```

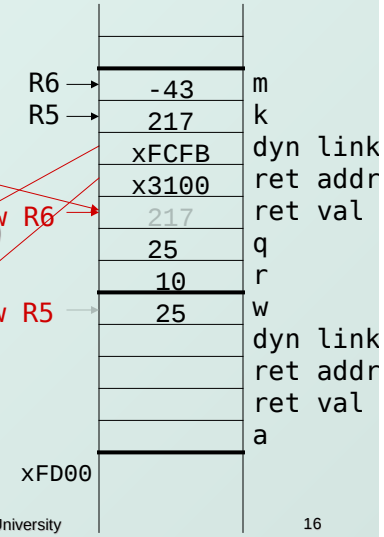

Resuming the Caller Function

- `w = Volta(w,10);`
-
```
JSR  Volta
; load return value
; from top of stack
LDR  R0, R6, #0
; perform assignment
STR  R0, R5, #0
; pop return value
ADD  R6, R6, #1
; pop arguments
ADD  R6, R6, #2
```

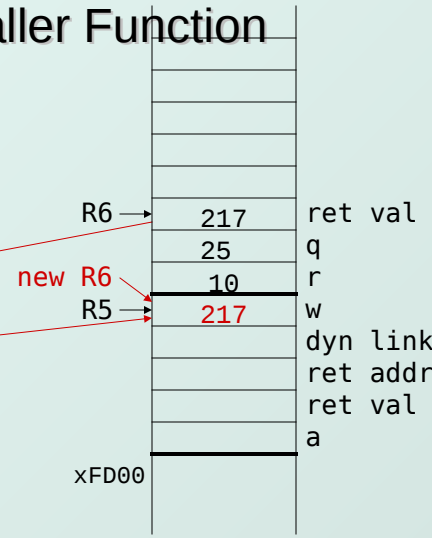

Summary of LC-3 Function Call Implementation

1. Caller pushes arguments (last to first).
2. Caller invokes subroutine (JSR).
3. Callee allocates return value, pushes R7 and R5.
4. Callee allocates space for local variables.
5. Callee executes function code.
6. Callee stores result into return value slot.
7. Callee pops local vars, pops R5, pops R7.
8. Callee returns (JMP R7).
9. Caller loads return value and pops arguments.
10. Caller resumes computation