Lecture 14:
Ray Sphere Intersection

September 21, 2017

Sphere Intersection

- Sphere centered at Pc with radius r.

$$\left|P - P_c\right|^2 = r^2$$

$$\left|L + sU - P_c\right|^2 - r^2 = 0$$

substitute

$$T = P_c - L$$

Yielding a quadratic equation

$$\left(sU - T\right)\cdot\left(sU - T\right) - r^2 = 0$$

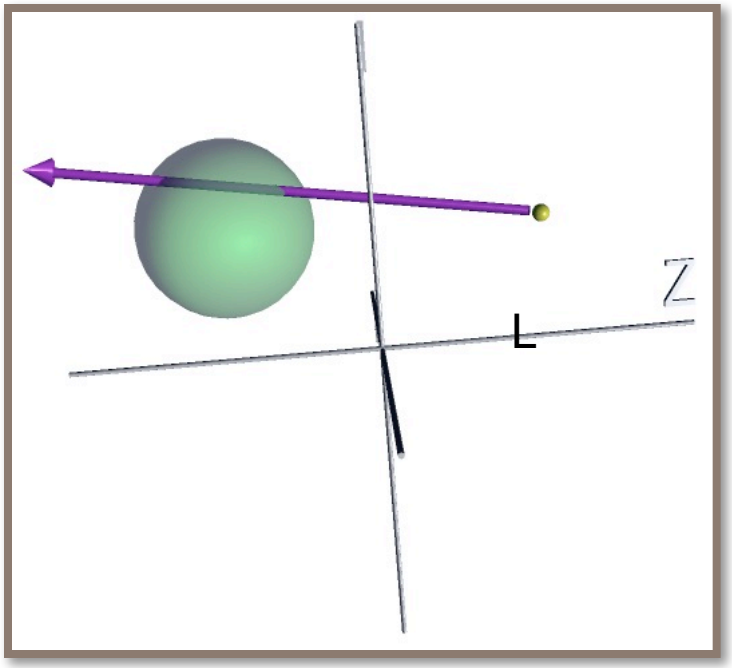

Brute Force (II)

- Expand to see what is happening.

$$\left(\left(s\begin{vmatrix} u_x \\ u_y \\ u_z \end{vmatrix} - \begin{vmatrix} t_x \\ t_y \\ t_z \end{vmatrix}\right) \bullet \left(s\begin{vmatrix} u_x \\ u_y \\ u_z \end{vmatrix} - \begin{vmatrix} t_x \\ t_y \\ t_z \end{vmatrix}\right)\right) - r^2 = 0$$

$$W \cdot W - r^2 = 0 \quad W = \begin{vmatrix} su_x - t_x \\ su_y - t_y \\ su_z - t_z \end{vmatrix} \quad T = \begin{vmatrix} x_c - x_0 \\ y_c - y_0 \\ z_c - z_0 \end{vmatrix}$$

$$\left(su_x - t_x\right)^2 + \left(su_y - t_y\right)^2 + \left(su_z - t_z\right)^2 - r^2 = 0$$

Sphere Intersection (III)

- Multiply then expand and collect terms.

$$\left(u_x^2 + u_y^2 + u_z^2\right)s^2 +$$
$$\left(-2t_x u_x - 2t_y u_y - 2t_z u_z\right)s +$$
$$\left(t_x^2 + t_y^2 + t_z^2\right) - r^2 = 0$$

  - U is length 1, so $(u_x^2 + u_y^2 + u_z^2) = 1$
  - So the equation may be written as:

$$s^2 - 2\left(U \cdot T\right)s + T \cdot T - r^2 = 0$$

Reduces to Quadratic

Note vector dot products.

$$as^2 + bs + c = 0$$

where

$$a = 1$$

$$b = -2(U \cdot T)$$

$$c = T^2 - r^2$$

Therefore:

$$s = \frac{-b \pm \sqrt{b^2 - 4ac}}{2a}$$

$$s = \frac{2(U \cdot T) \pm \sqrt{4(U \cdot T)^2 - 4(T^2 - r^2)}}{2}$$

$$s = (U \cdot T) \pm \sqrt{(U \cdot T)^2 - T^2 + r^2}$$

Actual Intersection Points

- Compute the two ***s*** values for the two intersections:

$$s_1 = (U \cdot T) + \sqrt{(U \cdot T)^2 - T^2 + r^2}$$

$$s_2 = (U \cdot T) - \sqrt{(U \cdot T)^2 - T^2 + r^2}$$

8 multiplies/squares (caching results; r^2 previously stored)

9 additions/subtractions

1 square root

- Compute the actual positions along the ray for the smallest positive *s*:

$$s^* = \min(s_1, s_2)$$

$$P^* = L + s^* U$$

3 multiplies

3 additions

1 min

First Example

Sphere center: $C = (5, 5, 5)$

Ray start: $L = (0, 0, 0)$

Ray direction: $U = \left(\frac{1}{3}\sqrt{3}, \frac{1}{3}\sqrt{3}, \frac{1}{3}\sqrt{3}\right)$

Base to Center: $T = (5, 5, 5)$

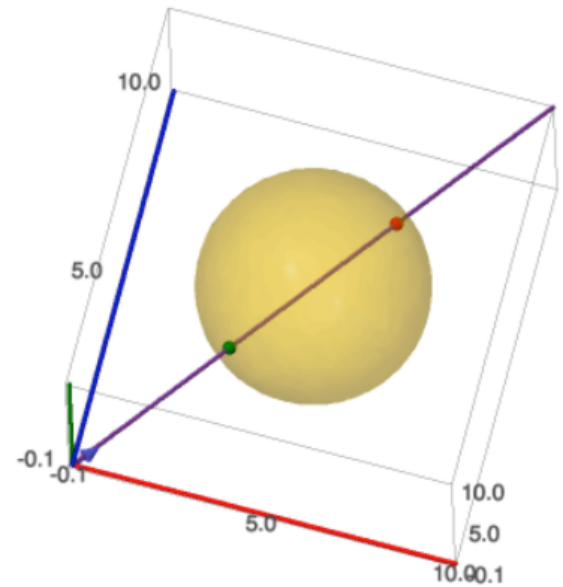

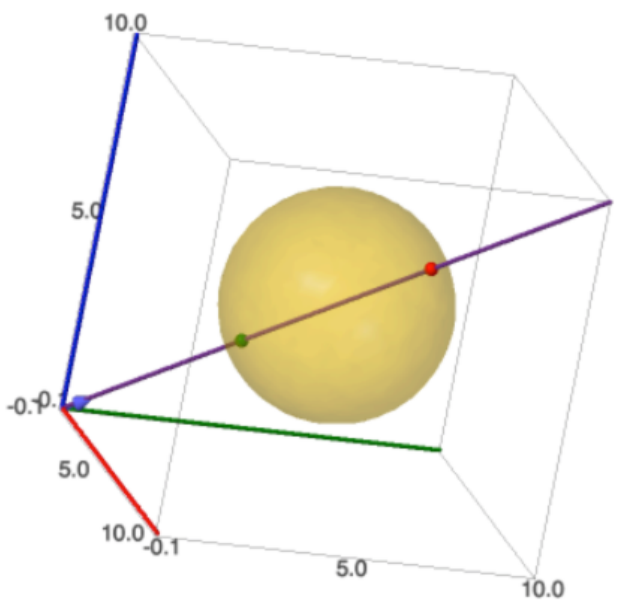

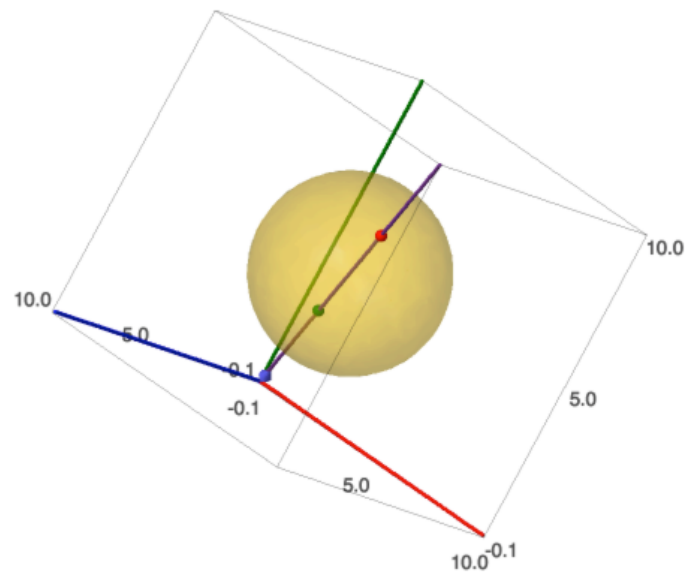

Second Example

Sphere center: $C = (5, 5, 5)$

Ray start: $L = (0, 0, 0)$

Ray direction: $U = \left(\frac{1}{3}, \frac{2}{3}, \frac{2}{3}\right)$

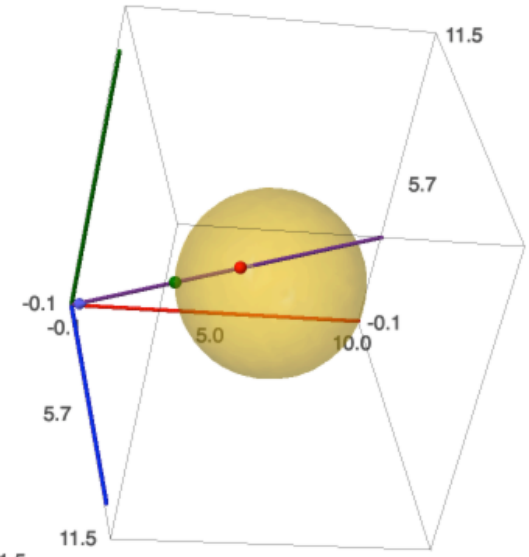

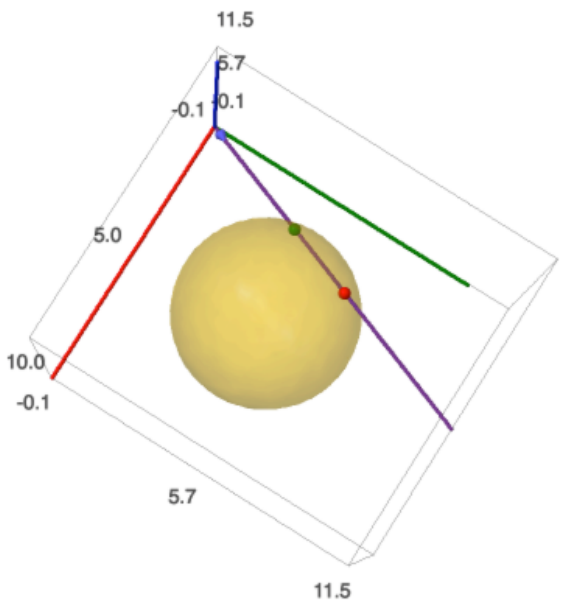

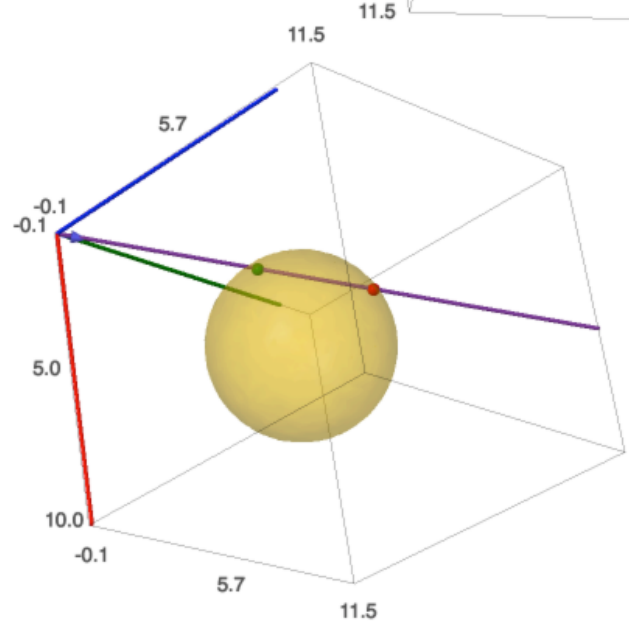

But Wait

- The proceeding follows naturally from parametric approach to intersection.
- But is it smart? Is there a better way?
- Yes.
  - Glassner, A. (ed) An Introduction to Ray Tracing. Academic Press, 1989
  - http://www.cs.unc.edu/~rademach/xroads-RT/RTarticle.html
- Let's see it,

Faster Method

$$v^2 + b^2 = c^2$$

$$d^2 + b^2 = r^2$$

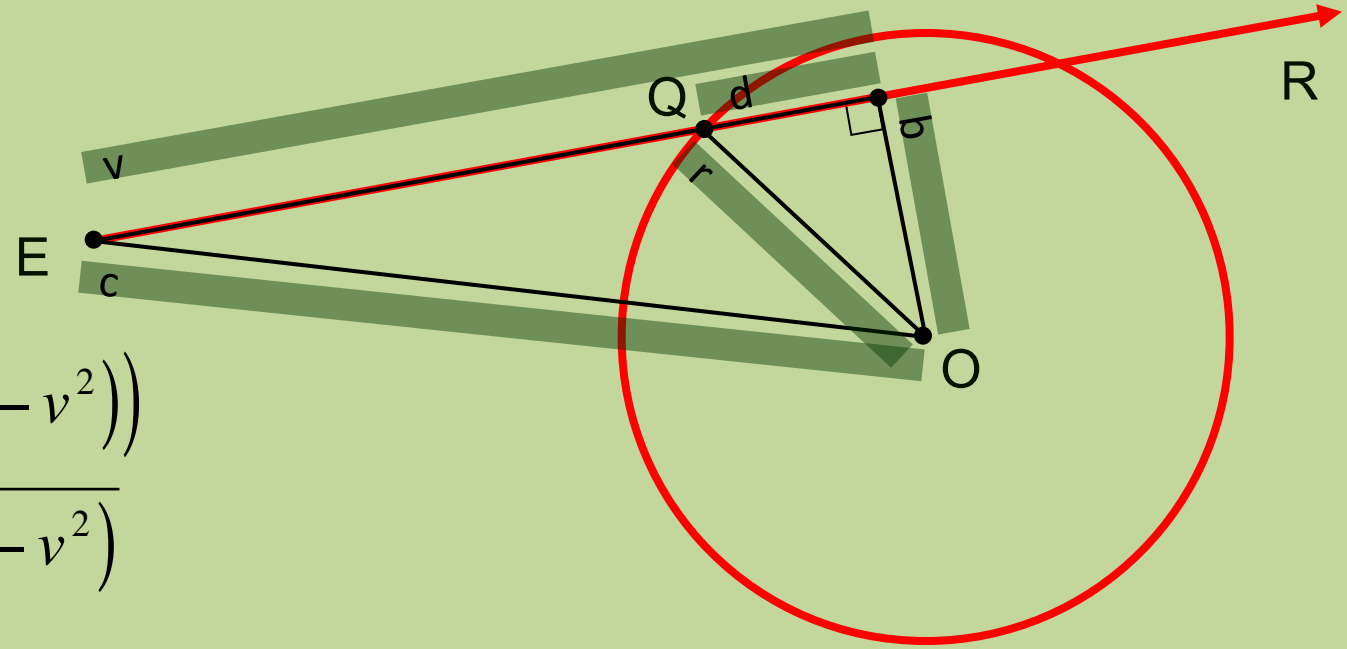

$$d^2 = \left(r^2 - \left(c^2 - v^2\right)\right)$$

$$d = \sqrt{r^2 - \left(c^2 - v^2\right)}$$

If d^2 less than zero, no intersection.
Otherwise, Q = E + (v-d)R

Faster Method - How Fast?

- Recall how *R* is defined …

$$R(s) = L + sU$$

$$v = (C - L) \cdot U$$

- Need to compute *v* …
  - 3 multiplies, 2 additions.
- Both r^2 and c^2 are already computed.
  - c^2 computed for case of ray coming from focal point
- Test if r^2 is greater than (c^2 - v^2)
  - 1 multiply, one conditional.
- Only if intersection, $Q = E+(v-d)R$.
  - 1 subtract, 3 multiplies, 3 additions.
- Another reference on this approach:
  - http://www.groovyvis.com/other/raytracing/basic.html

Example 1

Sphere center: $C = (5, 5, 5)$

Ray start: $L = (0, 0, 0)$

Ray direction: $U = \left(\frac{1}{26}\sqrt{26}, \frac{3}{26}\sqrt{26}, \frac{2}{13}\sqrt{26}\right)$

Base to Center: $T = (5, 5, 5)$

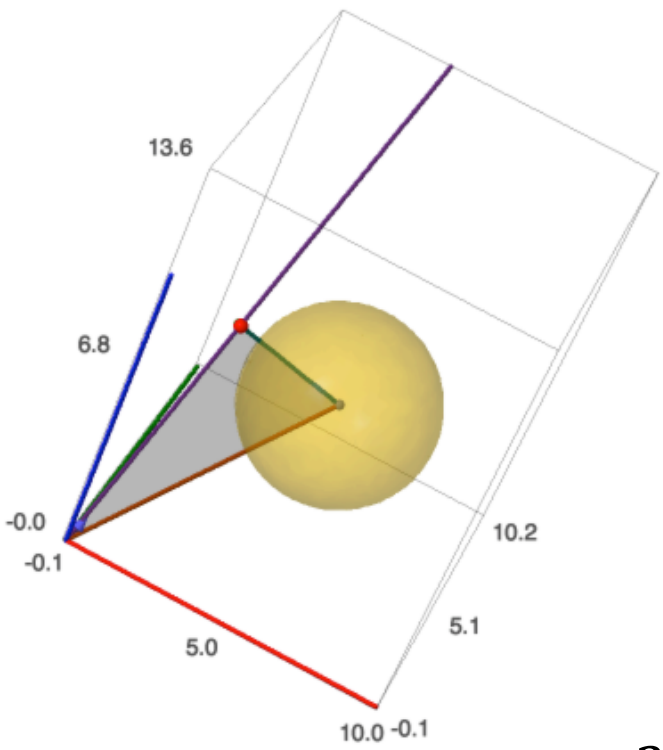

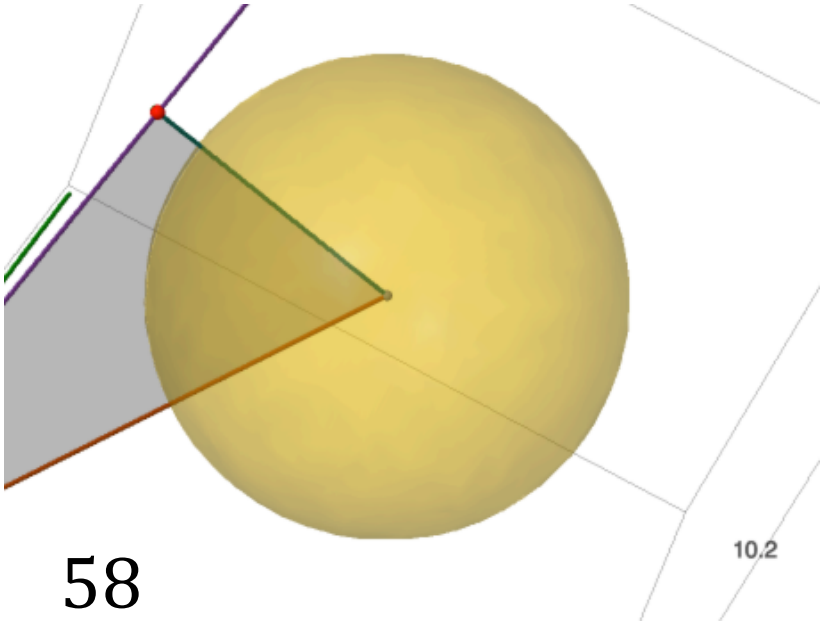

$$r^2 - b^2 = -\frac{58}{13}$$

Example 2

Sphere center: $C = (5, 5, 5)$

Ray start: $L = (1, 0, 1)$

Ray direction: $U = \left(\frac{1}{6}\sqrt{6}, \frac{1}{3}\sqrt{6}, \frac{1}{6}\sqrt{6}\right)$

Base to Center: $T = (4, 5, 4)$

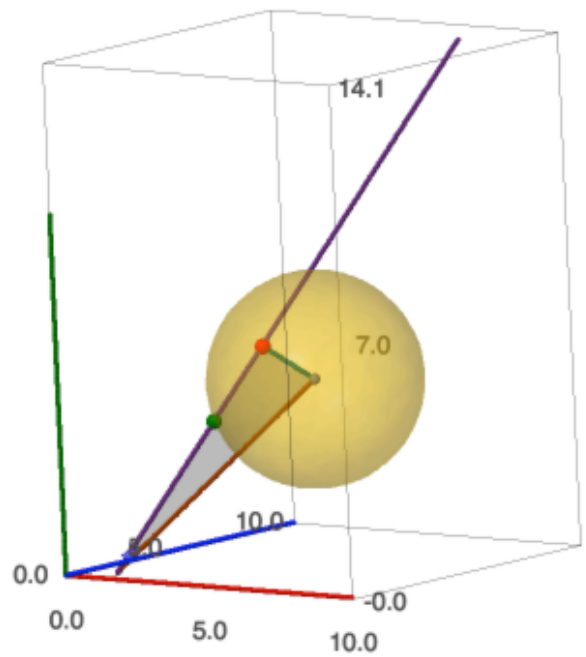

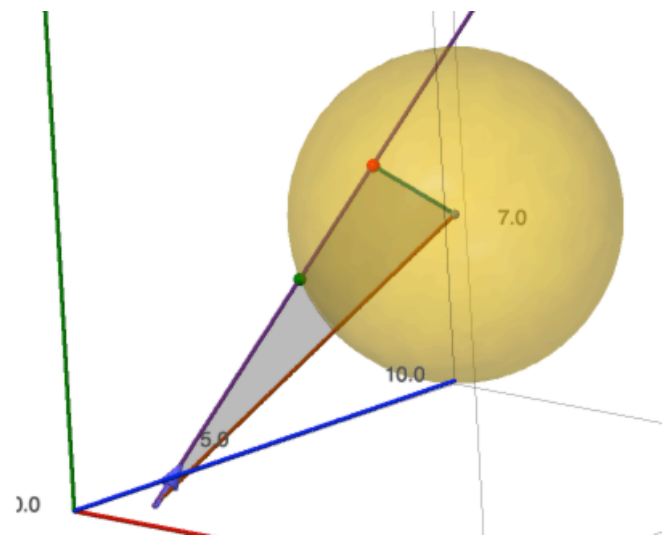

Option: Rays from Focal Point

- Earlier, we had the ray originate from pixel L.

$$R(s) = L + sU$$

- With the unit vector pointing from focal point E to pixel L.

$$U = \frac{L - E}{\|L - E\|}$$

- Now, instead, let ray originate from focal point E.

$$R(s) = E + sU$$

How might this help?

Intermediate values remain constant across all pixels when always using the focal point E as the base of the ray.

Why Spheres in a Triangle World?

- How do spheres help with big polygonal models??
- Define a sphere around your model.
  - Intersecting the sphere is necessary but not sufficient for intersecting polygons in the model.
  - May help greatly to reduce work.
- What factors contribute to savings?