CS 455: Introduction To Distributed Systems [Election Algorithms]

On elections and wireless mesh networks

To communicate
  Nodes must be in range

Decide they must, about when to wait
  And when to complete the exchange

Allowing them to flesh
  Out a tree from the mesh

- Shrideep Pallickara
  - Computer Science
    - Colorado State University

Topics covered in this lecture

- Election Algorithms
  - Elections in wireless environments [Vasudevan et al]
- Architectural Styles

ELECTIONS IN WIRELESS ENVIRONMENTS

Elections in wireless environments [Vasudevan's algorithm]

- Solution can handle failing nodes and partitioning networks
- We will look at simplified approach
  - Ad hoc networks … but the nodes are not allowed to move physically

Wireless ad hoc network setting

- Each node can initiate an election by sending an `election` message to its immediate neighbors
- These are neighbors in its **range**

Forwarding of `election` messages and parent-child relationships

- When node receives an `election` message for first time
  - Designates the sender as **parent**
  - Sends out `election` message to all its neighbors except the parent
- When a node receives an `election` message from a node other than its parent
  - Merely acknowledge receipt of the message

When a node R has designated Q as its parent

- Forward `election` message to immediate neighbors (except Q)
- **Wait** for acknowledgements to come in *before* acknowledging `election` message from Q

But why wait?

- Neighbors that already have a parent will immediately respond to R
- If all neighbors have a parent?
  - R is a leaf node and will be able to report back to Q quickly
- Report information such as battery lifetime and other resource capacities
  - Allows Q to **compare** R's capacities to that of *other downstream nodes*
  - Select best eligible node for leadership

But Q has sent an election message only because its parent P has

- When Q eventually acknowledges `election` message previously sent by P
  - It will pass most eligible node to P as well
- Source will know which node is best to be selected as a leader
  - Broadcast this information to all the other nodes

Election algorithm in a wireless network

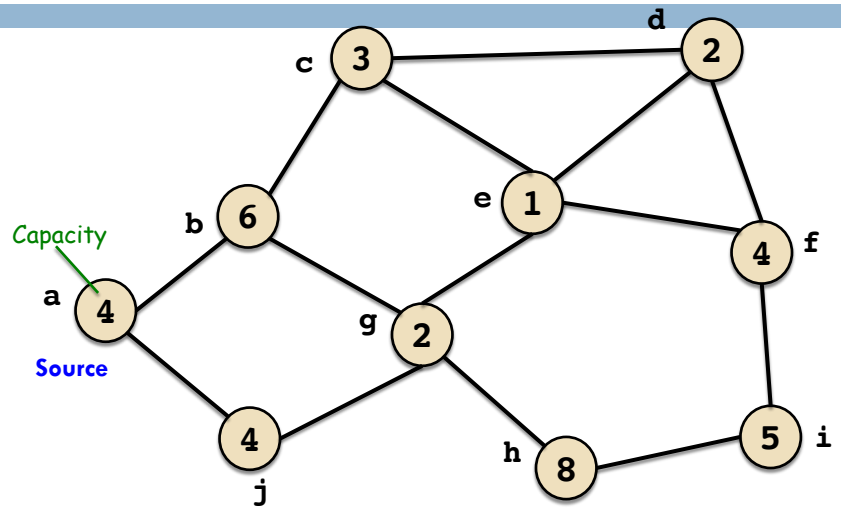

Election algorithm in a wireless network

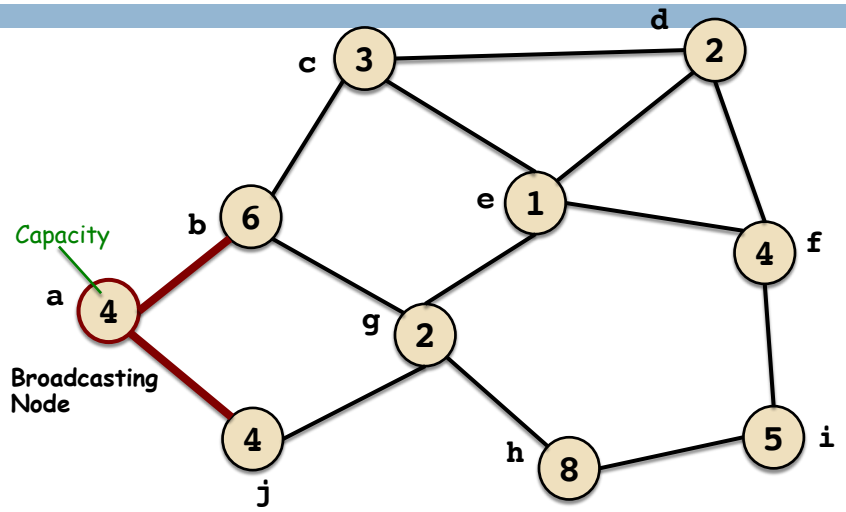

Election algorithm in a wireless network

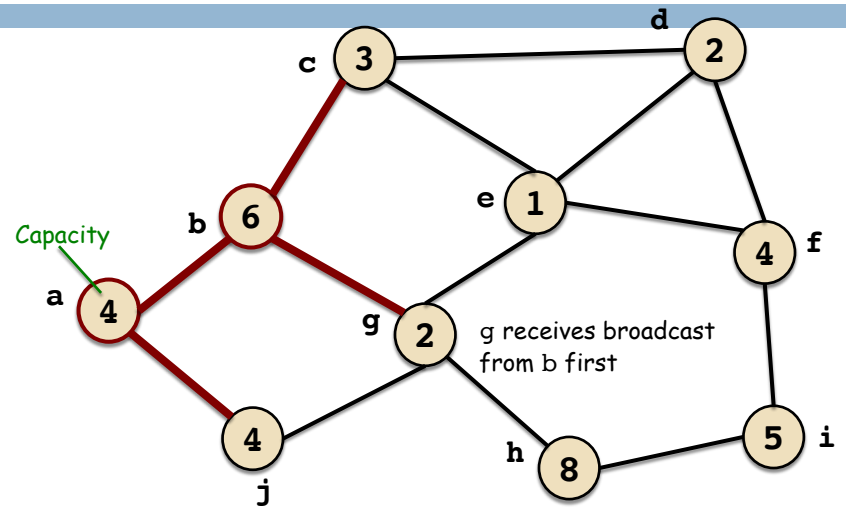

Election algorithm in a wireless network

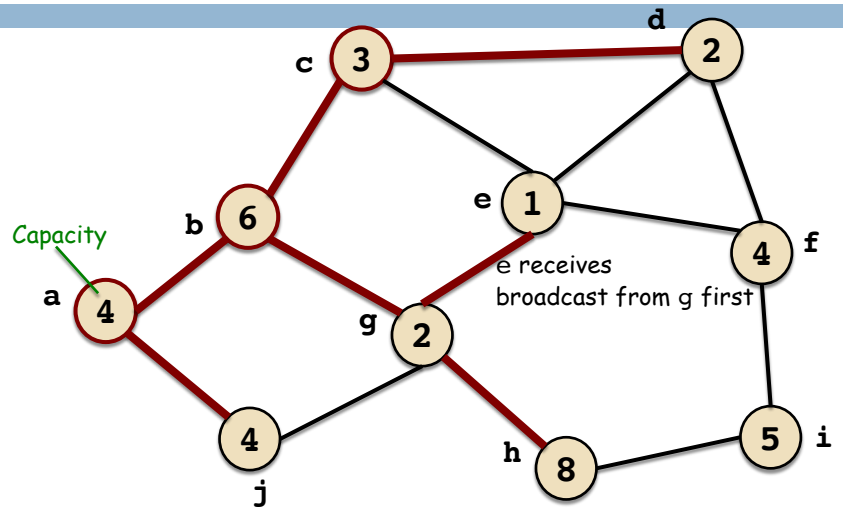

Election algorithm in a wireless network

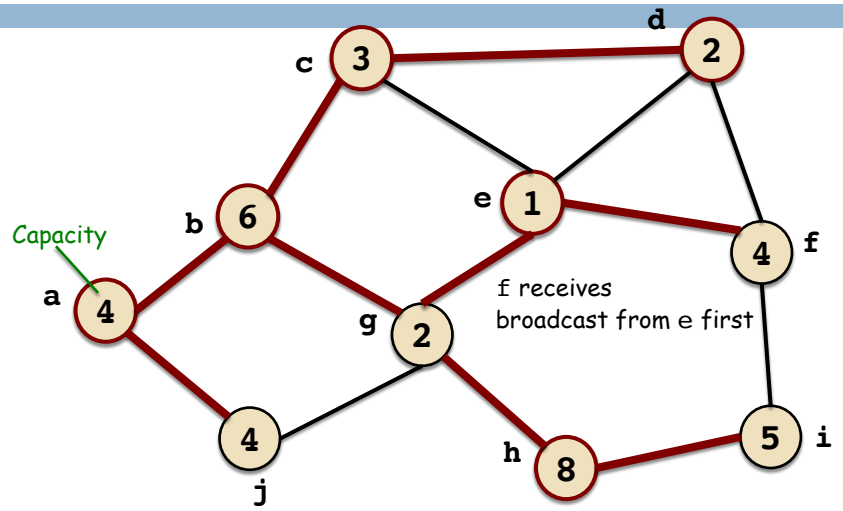

Election algorithm in a wireless network

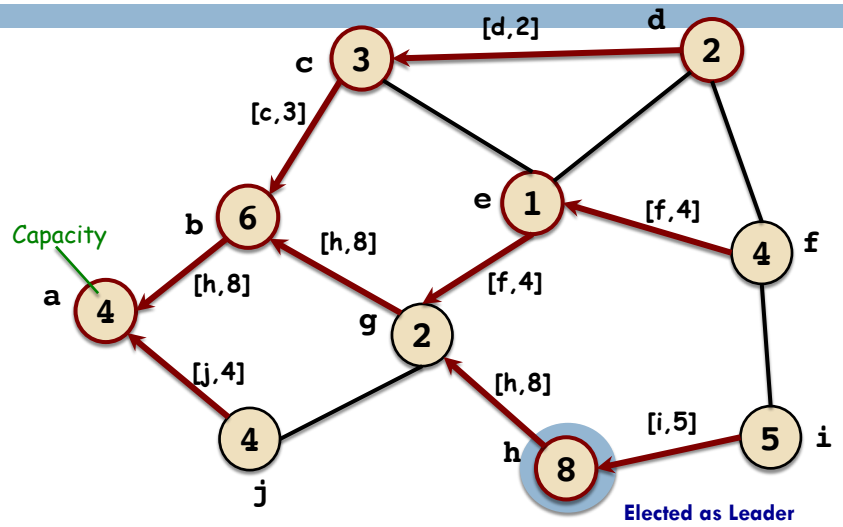

Coping with situations when multiple elections are initiated

- Each source tags its `election` message with a unique identifier
- Nodes participate in elections with the highest identifier
  - Stopping participation in other elections

ARCHITECTURES & TOPOLOGY

What we will look at

- Architectural styles for designing systems
  - Layered, objects, data, and event based
- Topologies
  - The role they play in systems design
- Implications:
  - Throughput, scaling, fault tolerance and resiliency, latencies

ARCHITECTURAL STYLES

Components are the building blocks of distributed systems

- Modular units
- Well defined-interfaces
- **Replaceable**

- Connectors
  - Mediate communications and coordination between components

Architectural style of distributed systems are formulated in terms of components

- How they are **connected** to each other
- How they **exchange** data
- How they are **configured** into a system

Broad architectural styles

- Layered
- Object-based
- Data-centric
- Event-based

Layered architecture

- Components are organized in a layered fashion
- Component at layer L_i can call components at layer L_{i-1}
- Widely adopted in the networking community

Requests go down the hierarchy; results flow upward

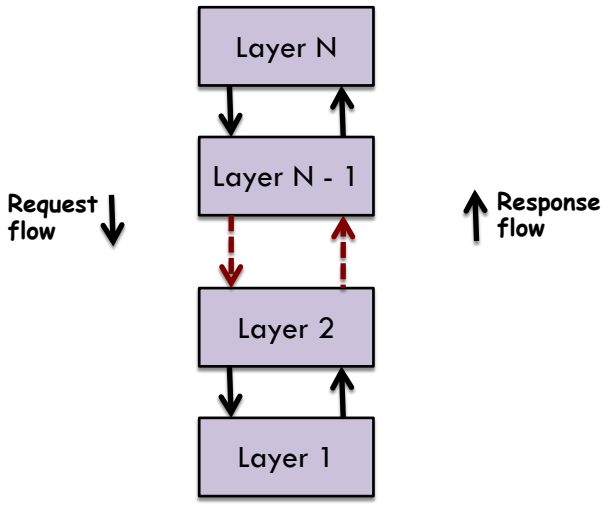

Object-based: Objects are components, connected via (remote) procedure calls

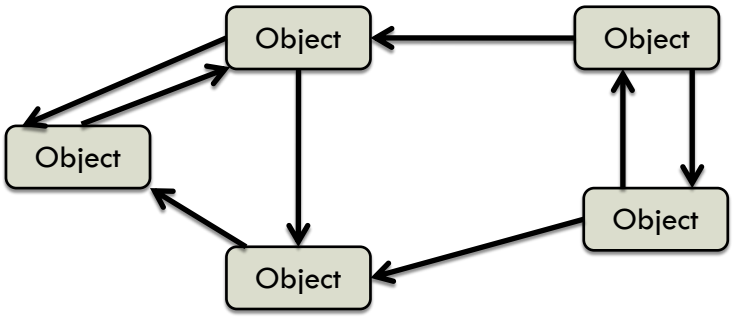

Data centered architectures

- Processes communicate through a **shared repository**
  - Shared distributed file system
  - Shared Web-based data services

Event-based architectures

- Communication is via events
- Processes are **loosely-coupled**
  - Don't need to be aware of each other
  - Only specify what you need
- **Middleware** decides what goes where
  - Event routed to processes that are interested in them

Event-based architectures

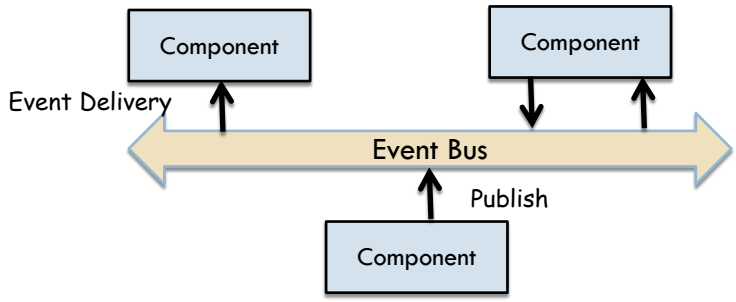

Shared data spaces: Data-centric plus Event-based

- Processes are **time-decoupled**
  - No need to be active simultaneously
  - Consumers may be offline

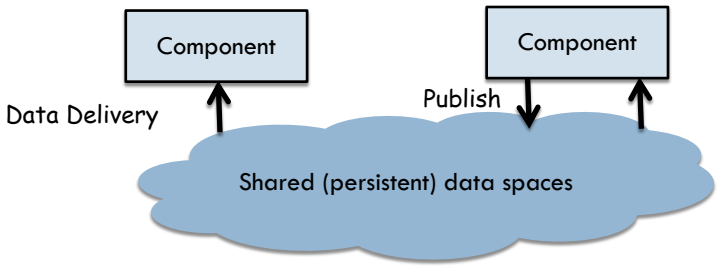

SYSTEM ARCHITECTURES

Client Server architecture

- Server **implements** a service
- Client **requests** the service
  - Send request
  - Await server response

} **Request-reply semantics**

Interaction between a client and a server

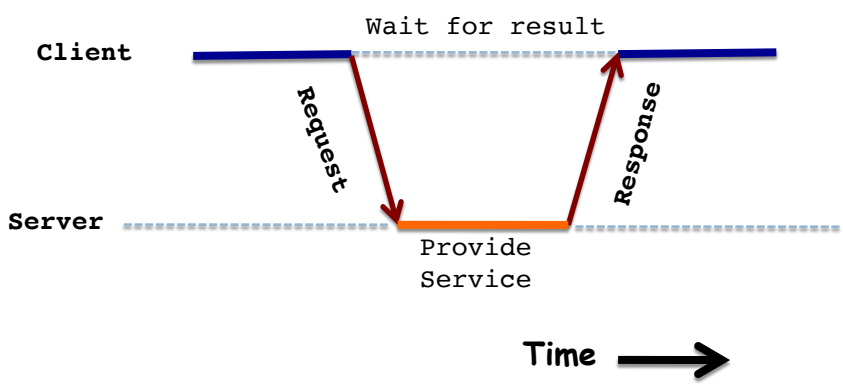

Communications between the client and server

- Could be based on a connectionless, unreliable protocol
- But that means dealing with occasional transmission failures
  - Difficult!

Why dealing with occasional failures is difficult

- Is resending messages enough?
- Client **cannot detect** whether
  - Original message was lost OR
  - The transmission of the reply failed
    - If request is resent, operation will be performed twice

Idempotent operations are those that can be repeated many times

- How much do I have in my checking account?
  - Idempotent
- Transfer $10,000 from my bank account
  - Not idempotent

Solution is to use reliable connection-oriented protocols

- Most Internet application protocols are based on TCP/IP
  - Client requests service after setting up connection
  - Server uses **same** connection to send a response
- Issues
  - Setting up and tearing down connection is costly
    - Even more so for small requests and responses

Demarcation of client-server roles is an issue

- Server for a distributed database
  - Forwards requests to file servers that manage the database table
  - The server itself acts as a client
- Suggested layers include
  - **User**-interface level
  - **Processing** level
  - **Data** level

An example of a 3-tier application

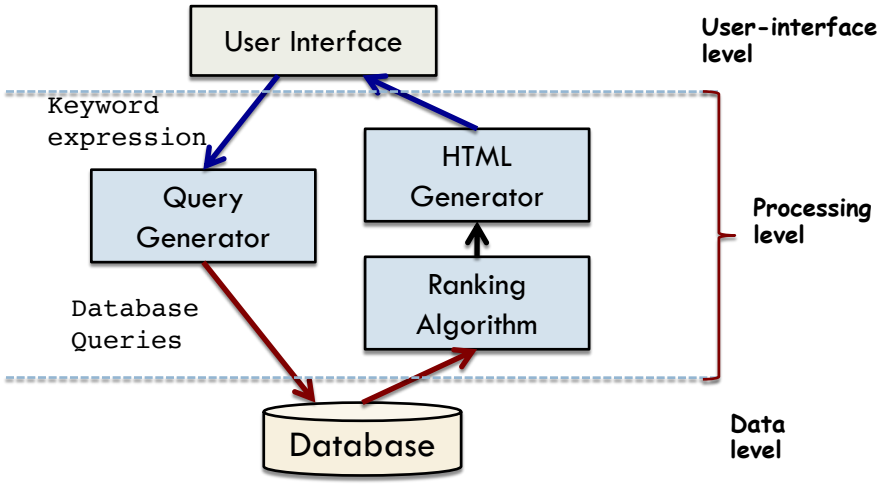

Timing diagram in such a setting

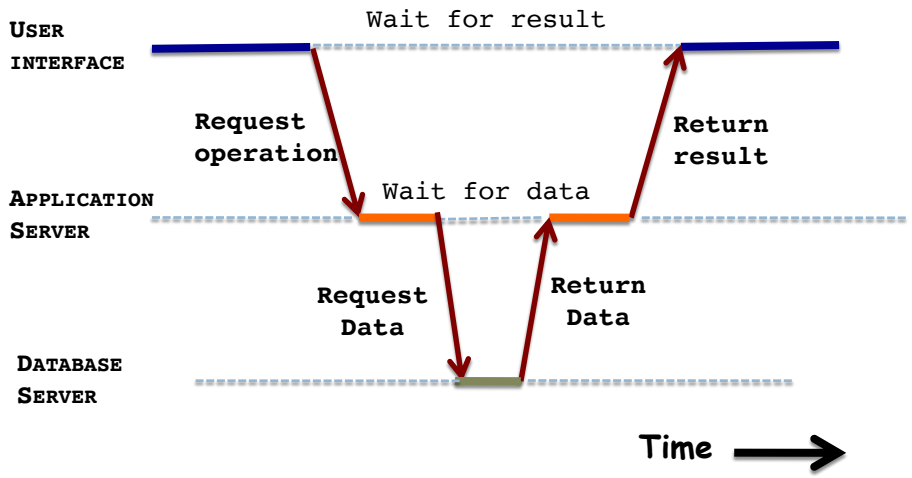

Client-server and variants

- **Vertical** distribution
- Tiers correspond to logical organization of applications
- Logically different components reside on different machines

The contents of this slide set are based on the following references

- *Distributed Systems: Concepts and Design*. George Coulouris, Jean Dollimore, Tim Kindberg, Gordon Blair. 5th Edition. Addison Wesley. ISBN: 978-0132143011 [Chapter 15]
- *Distributed Systems: Principles and Paradigms. Andrew S. Tanenbaum and Maarten Van Steen. 2nd Edition. Prentice Hall. ISBN: 0132392275/978-0132392273* [Chapter 2, 6]