CS 555: Distributed Systems [Threads]

Shrideep Pallickara
Computer Science
Colorado State University

Frequently asked questions from the previous class survey

Topics covered in this lecture

- Threads
  - Contrasting with processes
  - Threads in Distributed Systems
  - An example of performance improvements with Threads
  - Threading architectures for Servers
  - State

THREADS

Threads execute their own piece of code independently of other threads, but …

- No attempt is made to achieve high-degree of concurrency transparency
  - Especially, not at the cost of performance
- Only maintains information to allow a **CPU to be shared** among several threads
- Thread context
  - CPU Context + Thread Management info
    - List of blocked threads

Information not strictly necessary to manage multiple threads is ignored

- Protecting data against inappropriate accesses by multiple threads in a process?
  - Developers must deal with this

THREADS VS. MULTIPLE PROCESSES

Why prefer multiple threads over multiple processes?

- Threads are **cheaper** to create and manage than processes
- Resource **sharing** can be achieved more *efficiently* between threads than processes
  - Threads within a process share the address space of the process
- Switching between threads is cheaper than for processes
- **BUT …** threads within a process are **not protected** from one another

Other costs for processes

- When a new process is **created** to perform a task there are other costs
  - In a kernel supporting virtual memory the new process will incur **page faults**
    - Due to data and instructions being referenced for the first time
- Hardware caches must *acquire new cache entries* for that particular process

Contrasting the costs for threads [1/2]

- With threads these overheads may also occur but they are likely to be smaller
- When thread accesses code & data that was *accessed recently by other threads* in the process?
  - Automatically take advantage of any hardware or main memory caching

Contrasting the costs for threads [2/2]

- **Switching** between threads is much faster than that between processes
- This is a cost that is incurred many times throughout the lifecycle of the thread or process

A process with multiple threads of control can perform more than 1 task at a time

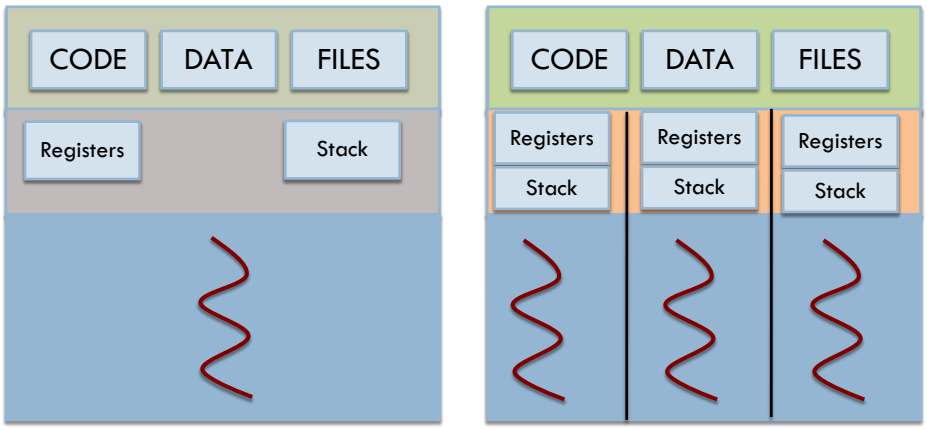

Traditional Heavy weight process

Implications?

- **Performance** of a multithreaded application is seldom worse than a single threaded one
  - Actually leads to performance gains
- Development requires **additional effort**
  - No automatic protection against each other

Thread use in non-distributed settings

- Interactive multithreaded application
  - Parts of program may be blocked or slow
  - Remainder of program may still chug along
- A single threaded process can ONLY run on 1 processor
  - Regardless of how many are available
  - Underutilization of computational resources

Another drawback of processes is the overheads for IPC (Inter Process Communications)

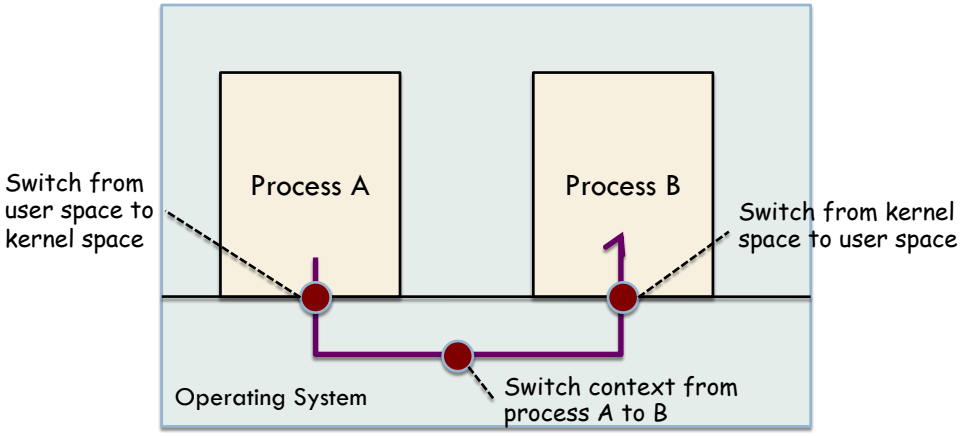

Applications can be constructed using separate threads

- Communications dealt entirely using **shared data**
  - Performance is much better
- Software engineering
  - Collection of several (generally independent) tasks
  - Word Processor
    - Input handling, spell check, layout, index generation …

THREADS IN DISTRIBUTED SYSTEMS

Threads in distributed systems: Multithreaded clients

- **Hide** communication latencies
  - Initiate communications
  - Immediately do something else

  } **Interleave**

- Web browsers
  - As soon as main HTML page is fetched
    - Display it
  - Activate threads to retrieve other data types

  } **Identical Code**

Several connections can be opened simultaneously

- To the same server
  - If the server is overloaded; things get even slower
- To replicated servers
  - Data transfer in **parallel**
  - Much faster rendering of content

Multithreaded Servers

- Simplifies server code
- Easier to develop servers that exploit parallelism
- E.g.: Handling concurrent connections
  - Each connection managed by a different thread
  - Multiple connections handled by a **pool** of threads

An example of performance improvements with Threads

Client and Server with Threads

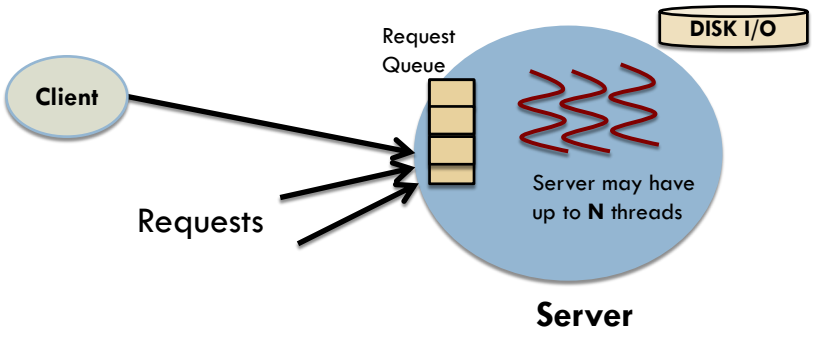

Server side processing

- Server has **queue** of requests received from clients
- Server also has a **pool** of one or more threads
  - Each thread repeatedly removes requests & processes it
- Each thread applies the same methods to process the requests
  - Each request takes 2 ms of processing PLUS 8 ms of I/O (when server reads from disk i.e. no caching)

Maximum server throughput with 1 thread

- The turnaround time for handling any request is 2+8 = 10 ms
- The server can handle 100 requests per second
- Any new requests that arrive while the thread is handling a request?
  - These will be queued

Server throughput with 2 threads

- We assume that the threads are independently schedulable
  - One thread can be scheduled while the other is blocked for I/O
- Thread T2 can process a second request when thread T1 is blocked, and vice versa
- This increases throughput … but both threads may be blocked for I/O on the single disk drive
- If all I/O requests are serialized and take 8 ms each?
  - Maximum throughput is 1000/8 = 125 requests/second

Server throughput with disk block caching

- Server keeps data that it reads in buffers
- When a server thread tries to retrieve data
  - It first examines the cache and avoids disk accesses if it finds data element there
- If the hit rate is 75%?
  - The mean I/O time per-request reduces to
    $(0.75 \text{ x } 0 + 0.25 \text{ x } 8) = 2$ milliseconds
- Maximum theoretical throughput?
  - Becomes 500 requests per second

But there are costs associated with caching

- Average processor time for a request increases
  - This is because it takes time to search for cached data for every operation
  - Let us assume that this is now 2.5 milliseconds
- The server can now handle 1000/2.5 requests per second i.e. 400

Let's look at caching plus multiple threads

- Each request takes about 2.5 (processing) + 2 (I/O)
  - Total time per request is now 4.5 mSecs when disk accesses are serialized
  - Each thread can do 1000/4.5 requests per second i.e. 222 requests/second
- With two threads?
  - 444 requests/second
- With three threads?
  - 500 requests (bound by the I/O time)

THREADING ARCHITECTURES FOR SERVERS

Worker pool architecture

- Server creates a fixed **pool** of worker threads to process requests
  - Pool is initialized when server starts up
- Incoming requests are placed into a queue
  - Workers *retrieve* requests (work units) from the queue and process them

Managing priorities in the worker pool?

- Introduce *multiple* queues
- Worker threads **scan** queues in the order of descending priority

Disadvantages of the worker pool model

- Number of worker threads is fixed
  - So, threads in the pool may be too few to adequately cope with the rate of requests
- Need to account for coordinated accesses to the shared queue

Thread-per-request architecture

- Worker thread is spawned for **each** incoming request
  - Worker thread *destroys itself* after processing request
- Advantages:
  - Threads do not contend for the shared work-queue
  - Throughput is potentially maximized
- Disadvantage
  - Overhead for thread creation and destruction operations

Thread-per-connection architecture

- Associates a thread per connection
- New worker thread created when a client makes a connection
  - Destroyed when client closes the connection
- Client may make many requests over the connection

Thread-per-object architecture

- Associate a thread with each remote object
- A separate thread receives requests and queues them
  - But there is a queue per-object

Thread-per-connection & Thread-per-object

- Advantages
  - Server benefits from lower thread management overheads compared to thread-per-request
- Disadvantages
  - Clients may be delayed when a worker thread has several outstanding requests, but another thread has no work to perform

SERVER DESIGN ISSUES

Server Design Issues

- **Iterative** Servers
  - Handles request
  - Returns response to requesting client
- **Concurrent** Servers
  - Pass request to a separate thread/process
    - **Multithreaded server**
  - Await new incoming request

The endpoint issue

- Clients send their requests to an endpoint
  - **Port** to which a server listens to
- But how do clients know about a port?
  - Globally assign endpoints for well-known ports
    - Internet Assigned Numbers Authority (IANA)
    - FTP {TCP, 21}, HTTP {TCP, 80}

Implementing each service with a separate server could waste resources

- Instead of having multiple servers awaiting client requests
  - Have a single **super-server**
- INETD daemon on Unix
  - Listens to **several ports** for Internet services
    - Pop3 {110}, FTP {21}, Telnet {23}
  - When request comes in:
    1. **Fork** process to handle it
    2. Process **exit**s once done

Designing Servers: Support interruption

- Terminate client session
  - Server will eventually detect connection loss (TCP)
- Send **out-of-band** data
  - Data to be processed before any other client data
- But how can we send this out-of-band data?
  1. Send to a different port
  2. Reuse same connection
     - TCP **urgent data** e.g. `socket.sendUrgentData(int data)`

STATE

Tracking State in Servers

- Stateless servers
- Stateful servers

Stateless servers

- No state information about clients
  - E.g. Web Servers
- Usually <u>some state</u> is maintained
  - Log of documents accessed by client
  - But if this is lost, there should be **no disruption** of service
- **Soft state**: track state for a limited time
  - When timer elapses, revert to default behavior

Stateful servers

- Maintain **persistent** information on clients
- Use this to improve **performance**
  - Real and perceived
- Special measures needed to recover from failures

Stateful servers: A file server example

- Allows client to maintain **local copy** of file
  - Even for updates to the file
  - Maintain {client,file} tuples to track file state
- Identify who has most recent version of file
- If server crashes it must recover the {client,file} entries

A hybrid approach: Have the client send its state to the server

- **Cookies** serve this purpose for Web pages
- Tells a site about the pages accessed by a user
  - Use this to decide how to manage client
  - Sent back to browser every time state info changes
- Cookies don't stay where they are baked!

The contents of this slide-set are based on the following references

- *Distributed Systems: Principles and Paradigms. Andrew S. Tanenbaum and Maarten Van der Steen. 2nd Edition. Prentice Hall. ISBN: 0132392275/978-0132392273.* [Chapter 6, 2]
- *Distributed Systems: Concepts and Design. George Coulouris, Jean Dollimore, Tim Kindberg, Gordon Blair. 5th Edition. Addison Wesley. ISBN: 978-0132143011.* [Chapter 7, 14]
- *Operating Systems Concepts. Avi Silberschatz, Peter Galvin, Greg Gagne. 8th edition. John Wiley & Sons, Inc. ISBN-13: 978-0-470-12872-5. [Chapter 4]*
- *Unix Systems Programming. Kay Robbins & Steve Robbins, 2nd edition. Prentice Hall. ISBN: 978-0-13-042411-2. [Chapter 2]*