CS 555: Distributed Systems
[Logical Clocks]

Shrideep Pallickara
Computer Science
Colorado State University

Frequently asked questions from the previous class survey

- NTP
  - Why use the closest server to synchronize?

Topics covered in this lecture

- Clock synchronization
  - Berkley Algorithm
  - Cristian's Algorithm
  - Synchronization in wireless settings
- Logical Clocks
  - Lamport's clocks

THE BERKLEY ALGORITHM

The Berkley Algorithm for time synchronization

- In NTP, the time server is passive
  - Server merely responds to queries from the server
- The time server is **active** in the Berkley Algorithm
  - Polls every machine periodically for their time
- Collects responses and computes the **average**
  - Tell machines to *slowdown* or *speedup* their clocks

Berkley Algorithm: An example

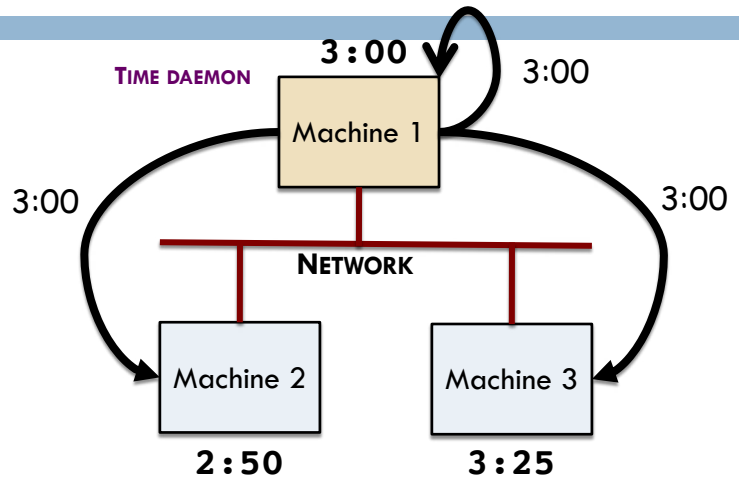

Berkley Algorithm: An example

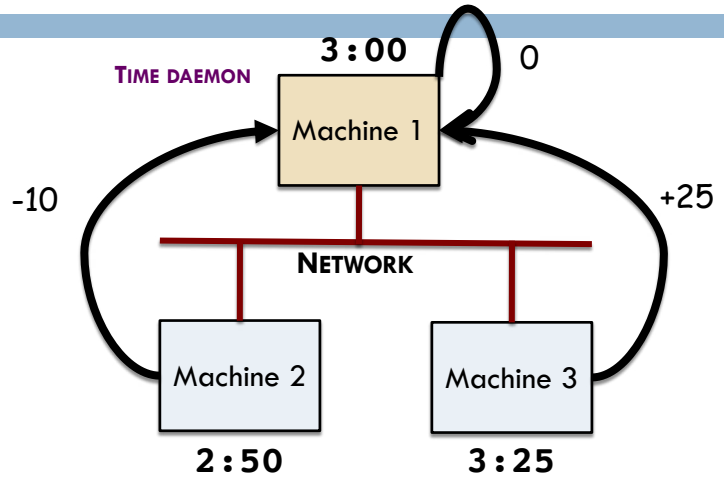

September 3, 2019
Professor: SHRIDEEP PALLICKARA

CS555: *Distributed Systems* [Fall 2019]
Dept. Of Computer Science, Colorado State University

L3.7

Berkley Algorithm: An example

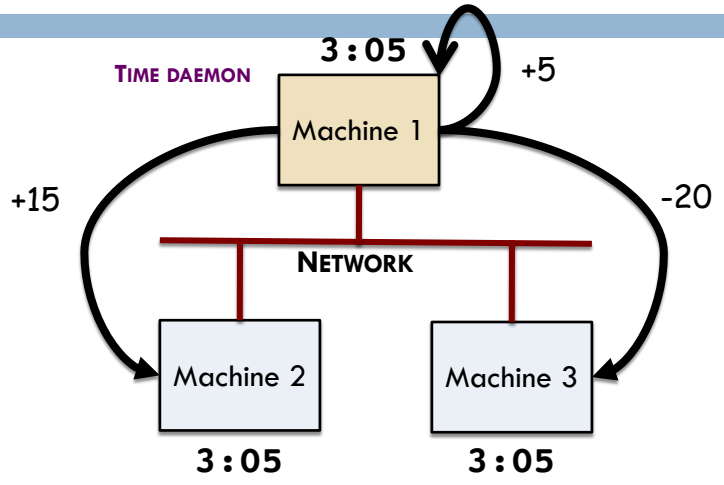

September 3, 2019
Professor: SHRIDEEP PALLICKARA

CS555: *Distributed Systems* [Fall 2019]
Dept. Of Computer Science, Colorado State University

L3.8

Time in the Berkley Algorithm

- Not necessary for the computed time to agree with real time
- It is sufficient that all machines agree on *some* time
- No harm done if there is no contact with external machines

CRISTIAN'S ALGORITHM

Cristian's algorithm

- Uses a time server to synchronize services
  - The server receives signals from a UTC source
- When a request is received, the server process supplies the time

Clock synchronization using a time server

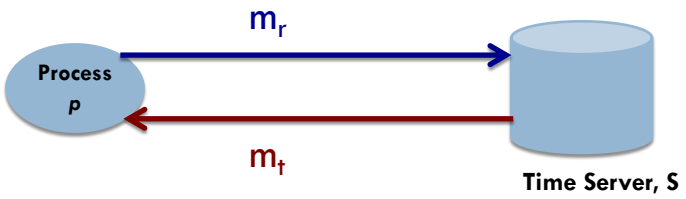

Some notations

- A process p requests time in a message m_r
- Process p receives time value in a message m_t
- Time t is inserted in m_t at the last possible moment by Server $\mathbf{S}$
- Process p records total round-trip time $\mathrm{T}_{\mathrm{round}}$
  - To send request m_r and to receive the reply m_t

Measurement of the round trip

- This is reasonably accurate if clock drift rate is small
- Round-trip time in a LAN is 1-10 ms
  - If the clock drift rate is 10^{-6} seconds/second?
    - That clock would vary at most by 10^{-8} seconds (10^{-6}x 10^{-2}) or 10^{-5} milliseconds

Estimating what the time at p should be [1/2]

- A simple estimate of this is $t + T_{round}/2$
  - Elapsed time is split equally before and after $\mathbf{S}$ placed t in m_t
- If the value of the minimum transmission time min is known (or conservatively estimated)?
  - We can determine accuracy of the result

Estimating what the time at p should be [2/2]

- The earliest point at which $\mathbf{S}$ could have placed the time in m_t?
  - min after p dispatched m_r
- The latest point at which $\mathbf{S}$ could have placed the time in m_t?
  - min before m_t arrived at p
- Time by $\mathbf{S}$'s clock when m_t the arrives at p
  - Range: $[t+ min,\ \ t+T_{round} - min]$
  - Width of the range is $T_{round} - 2min$
  - Accuracy is: $\pm(\mathrm{T_{round}}/2 - min)$

An interesting example

- An interesting case involves Google's TrueTime API
  - Explicitly reports the confidence interval on the local clock
  - When you ask it for the current time, you get back two values:
    - [earliest , latest]
    - The earliest possible and the latest possible timestamp.

Theoretical limit for coping with multiple faulty clocks?

- Dolev et al in 1986
- If f is the number of faulty clocks out of N
  - Then we must have $N > 3f$ if other, correct, clocks are still to be able to achieve agreement

Clock Synchronization in Wireless Networks

Sensor network settings

- Nodes are resource constrained
- Multihop routing is expensive
- Optimize algorithms for energy consumption

Reference broadcast synchronization (RBS)

- Objective is not to provide all nodes with UTC time
- Goal is to internally synchronize all clocks
- RBS is not a two-way protocol
  - Only the receivers synchronize
- In RBS, a sender broadcasts a reference message that will allow its receivers to adjust their clocks

Sensor network communications

- Time to propagate a signal to other nodes
  - Roughly constant
  - Assume that there is no multi-hop routing
- Wireless networks based on **contention protocol**
- Propagation time is measured from the moment message leaves NIC of sender
  - Two elements no longer play role in estimating delay
    - Time to construct the message
    - Time to access the network

Critical paths in determining network delays: Regular Settings

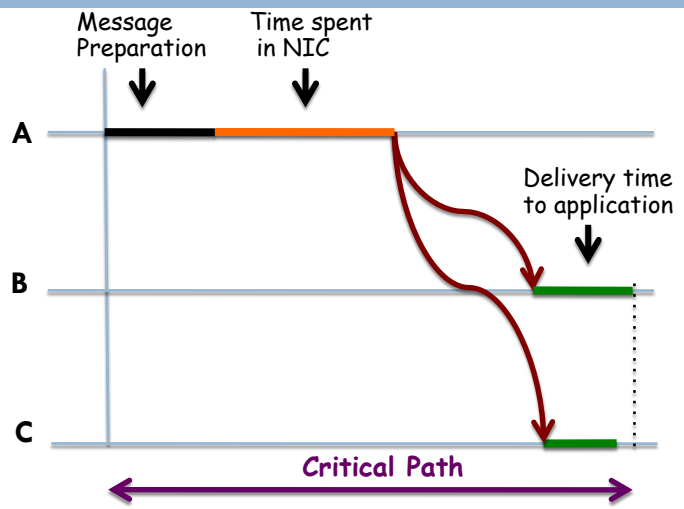

Critical paths in determining network delays: RBS

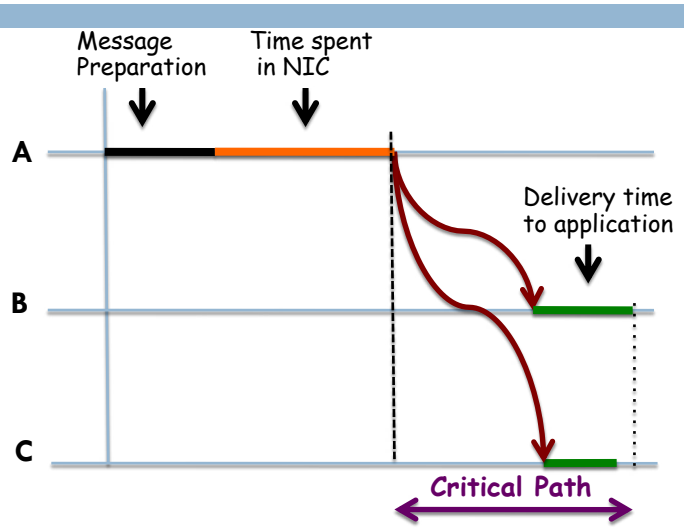

When a node broadcasts a reference message m

- Each node p, records $T_{p,m}$
  - The time it received m
  - Based on p's local clock
- Two nodes, p and q can compare delivery times to compute mutual, relative offset

$$Offset[p,q] = \frac{\sum_{k=1}^{M} T_{p,k} - T_{q,k}}{M}$$

M is the total number of reference messages

LOGICAL CLOCKS

Physical time in a distributed system is problematic

- This is not because of the effects of special relativity, which are negligible or non-existent for normal computers
  - Unless you count computers travelling in spaceships
- It is because of the *inability to accurately timestamp* events at different nodes
  - We need this to order any pairs of events

If two processes do not interact with each other?

- Their clocks <u>need not</u> be synchronized
- Lack of synchronization is not observable
  - Does not cause problems

Logical clocks

- Within a single process, events are ordered uniquely by times shown on local clock
- But we cannot synchronize clocks perfectly across a distributed system [Lamport 1978]
  - We cannot use physical time to find out the order of an arbitrary pair of events in a distributed system

We can use a scheme that is similar to physical causality to order events

1. If two events occurred at the same process p_i (i=1, 2, …, N) ?
   - Then they occurred in the order in which p_i observes them
     - This is the order $\rightarrow_i$
2. When a message is sent between processes?
   - The event of sending the message occurred before the event of receiving the message

The → relation

- Lamport called the **partial ordering** obtained by generalizing the previous 2 relationships
  - The *happened-before* or *happens-before* relation
- Sometimes also known as the relation of *causal ordering* or *potential causal ordering*

Lamport's logical clocks

- The **happens-before** relation →
- a and b are events in the process; and a occurs before b
  - Then a → b is true
- a is event of message sent by one process;
  b is event of message being received in another process
  - Then a → b is true

Some more things about the happens-before relation

- If $a \rightarrow b$ and $b \rightarrow c$; then $a \rightarrow c$
  - **Transitive**
- If events x and y occur in processes that do not exchange messages, then …
  - $x \rightarrow y$ is not true
  - But, neither is $y \rightarrow x$
  - These events are said to be **concurrent**

Events occurring at three processes

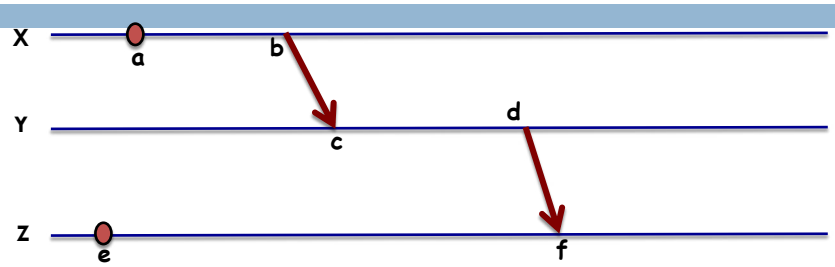

- $a \rightarrow b$ and $c \rightarrow d$
  - These occur within the same process
- $b \rightarrow c$ and $d \rightarrow f$
  - Events that correspond to sending and receiving messages
- We can use transitivity to say $a \rightarrow f$
- No relationship between a and e; these are **concurrent** $a \parallel e$

If the → relation holds between two processes

- The first event might or might-not have caused the second
  - The → relation only captures **potential causality**
    - *i.e.* two events can be related by → without a real connection between them
- EXAMPLE 1: If the server receives a request and sends a response?
  - Then reply is caused by the request
- EXAMPLE 2: A process might receive a request and subsequently issue another message
  - But this could be one that it issues every 5 minutes anyway

A simple example of Lamport timestamps

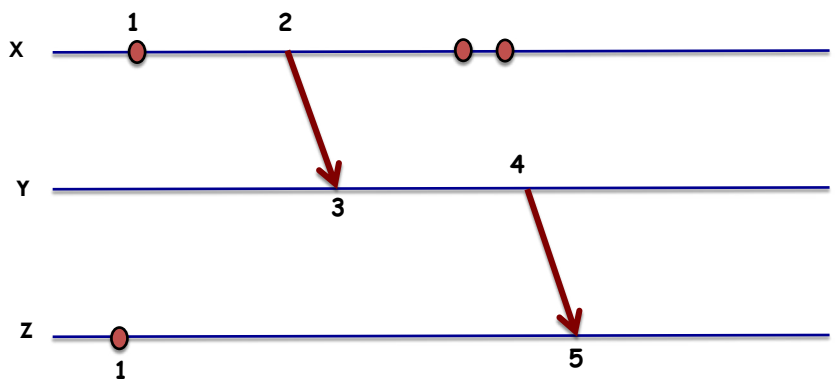

An example of Lamport's algorithm:

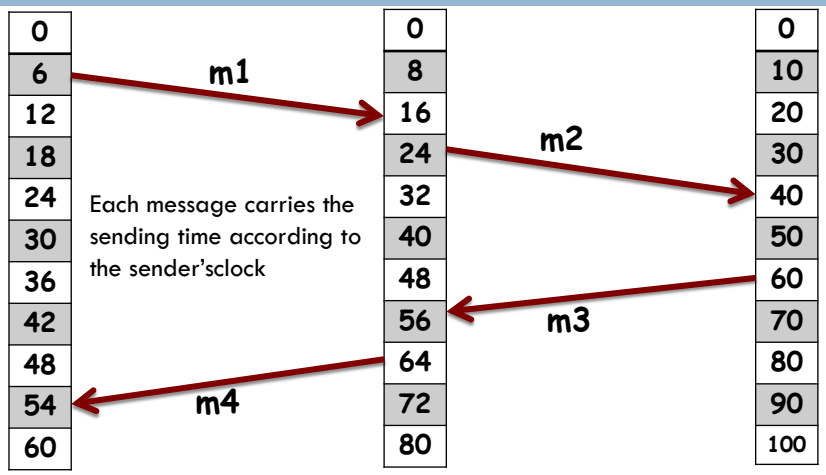

Each clock runs at a constant (but different rate)

An example of Lamport's algorithm:

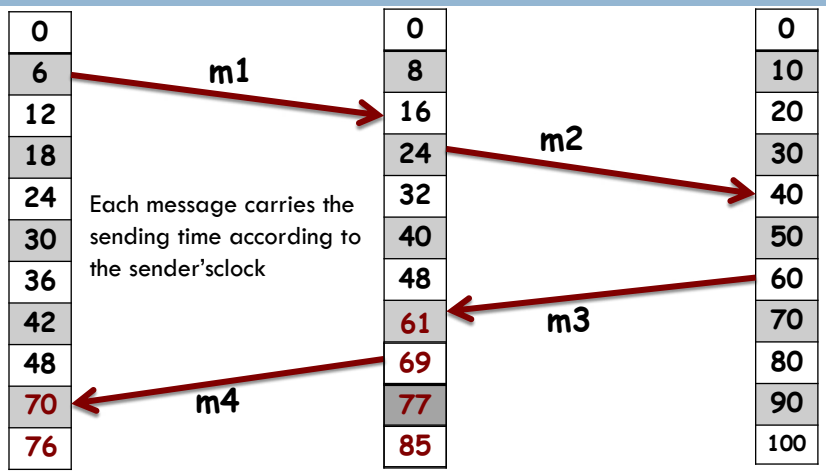

Each clock runs at a constant (but different rate)

Implementing Lamport's clocks

1. Before executing an event; P_i executes
   $C_i = C_i + 1$
2. When P_i sends a message m to P_j ; it sets m's timestamp $ts(m)$ to C_i in previous step
3. Upon receipt of message m, P_j adjusts its own local counter
   $C_j = max\ \{C_j, ts(m)\}$
   do step (1) and deliver message

The positioning of Lamport's clocks in distributed systems

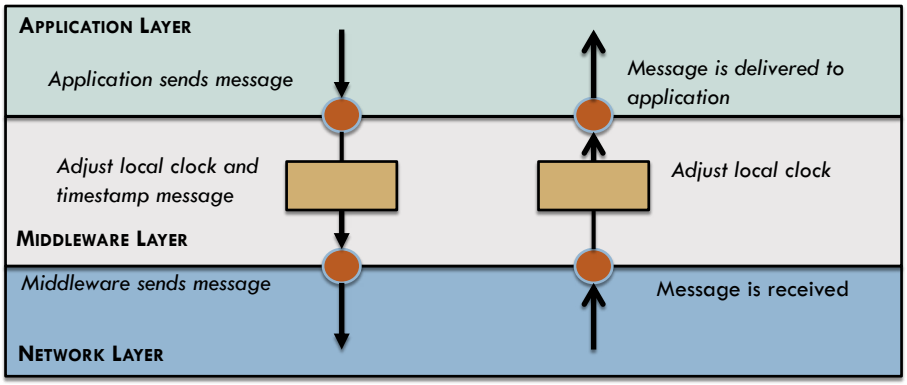

An application of Lamport's clock: User has $1000 in bank account initially

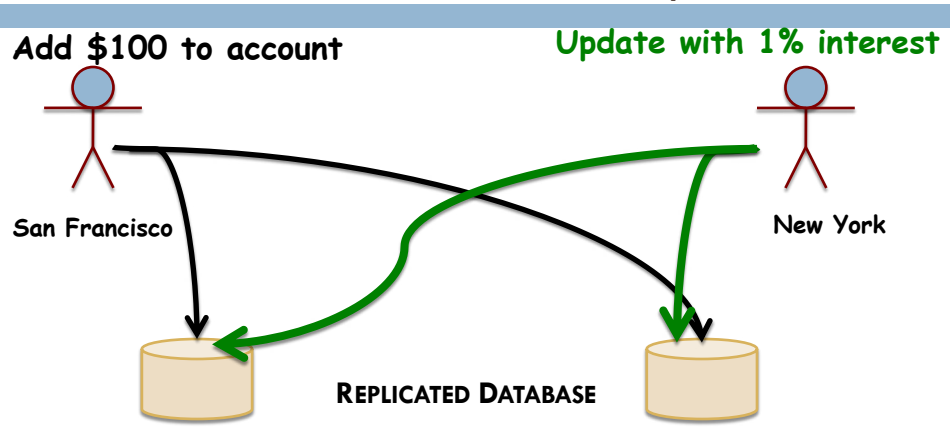

Add $100 .... Total:$1100
Give 1% interest on total= $11
Balance: $1111

Give 1% interest ... Total= $1010
Add $100
Balance: $1110

There is a difference when the orders are reversed

- Our objective for now is consistency
- Both copies must be exactly the same

Use Lamport's clock to order messages

- Process puts received messages into local queue
  - Ordered according to the message's timestamp
- Message can be delivered only if it is **acknowledged** by all the other processes
- If a message is at the head of the queue, and acknowledged by all processes
  - It is delivered and processed

Lamport's Clocks order events based on the happened-before relationship

- If a happened before b, then $C(a) < C(b)$
- But nothing can be said about two events a and b by merely comparing their values
- $C(a) < C(b)$?
  - Does not mean a happened before b

Let's look a little closer

- $T_{snd}(m_i)$: Time m_i was sent
- $T_{rcv}(m_i)$: Time m_i was received
- $T_{snd}(m_i) < T_{rcv}(m_i)$
- BUT
  - $T_{snd}(m_i) < T_{rcv}(m_j)$?
    - NO

Concurrent message transmissions

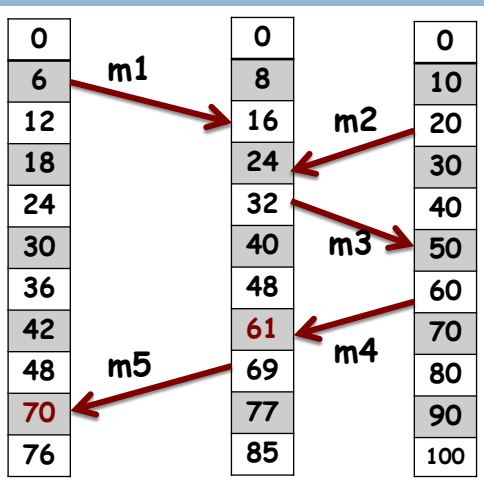

Sending m3 MAY HAVE depended on m1

$T_{rcv}(m1) < T_{snd}(m2)$

But sending of m2 has nothing to do with receipt of m1

Lamport clocks do not capture causality

The contents of this slide-set are based on the following references

- *Distributed Systems: Principles and Paradigms. Andrew S. Tanenbaum and Maarten Van der Steen. 2nd Edition. Prentice Hall. ISBN: 0132392275/978-0132392273.* [Chapter 6]
- *Distributed Systems: Concepts and Design. George Coulouris, Jean Dollimore, Tim Kindberg, Gordon Blair. 5th Edition. Addison Wesley. ISBN: 978-0132143011.* [Chapter 14]
- http://en.wikipedia.org/wiki/Matrix_clocks