CS 556 – Computer Security
Spring 2018

Dr. Indrajit Ray
Email: indrajit@cs.colostate.edu

Department of Computer Science
Colorado State University
Fort Collins, CO 80523, USA

PUBLIC KEY CRYPTOGRAPHY

Public Key Cryptosystem

- Traditional secret key cryptography uses a single key shared by both sender and receiver
  - Problem – How to share the key?
- Does not protect sender from the receiver forging a message & claiming that message is sent by sender, the two parties being equal
- Solution - public key / asymmetric key cryptosystem

Goal of Public Key Crypto

- "... two parties communicating solely over a public channel and using only publicly known techniques can create a secure connection."
  - Diffie, Hellman, "New Directions in Cryptography", IEEE Transactions on Information Theory, Vol IT-22(6), Nov 1976.

Public Key Cryptosystem

- Public-key (or two-key or asymmetric key) cryptography involves the use of two keys:
  - a public-key, which may be known by anybody, and can be used to encrypt messages, and verify signatures
  - a private-key, known only to the recipient, used to decrypt messages, and create signatures

Public Key Cryptosystem

- First conceived by Diffie and Hellman in 1976
- Rivest, Shamir and Adleman were first to describe a public key system in 1978
- Merkle and Hellman published a different solution in 1978
- Many proposals have been broken (including the Merkle-Hellman proposal)
- Serious candidates today
  - RSA
  - El Gamal

Public Key Cryptosystems

- Three important classes of public-key algorithms:
  - Public-Key Distribution Schemes (PKDS) - used to securely exchange a single piece of information that is then used as a session key for a secret-key scheme
  - Public Key Schemes (PKS) - used for encryption, where the public-key encrypts and the private-key decrypts messages
  - Signature Schemes - used to create a digital signature, where the private-key creates and the public-key verifies signatures

Public Key Cryptography

- Any public-key scheme can be used as a PKDS, just by selecting a message which is the required session key
- Many public-key schemes are also signature schemes (provided encryption & decryption can be done in either order)

Public Key Cryptosystem

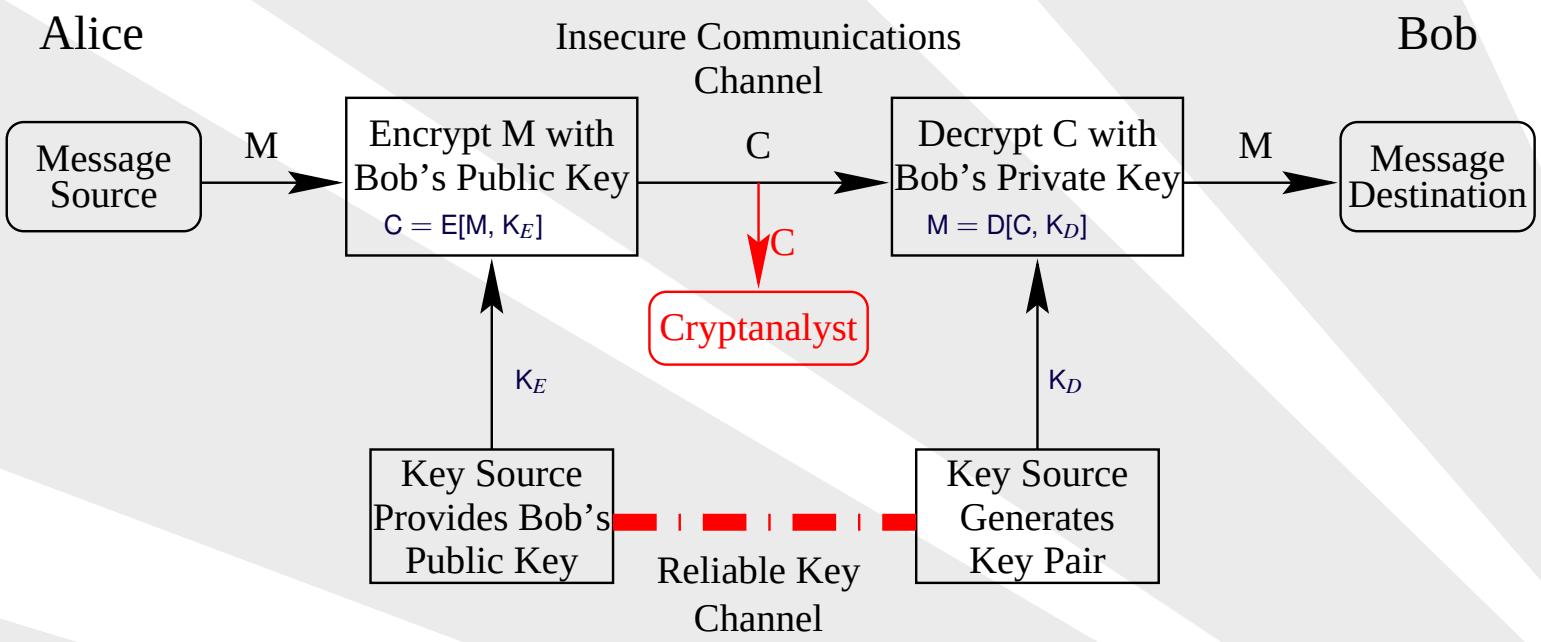

Properties of Public/Private Keys

- Public / Private key pairs, (K_E, K_D) are easy to generate (a polynomial time (P-time) problem)
- $D[E[M, K_E], K_D] = M$
- $D[E[M, K_D], K_E] = M$
- $K_E \neq K_D$
- $D[E[M, K_E], K'] = M \rightarrow K_D = K'$

Properties of Public/Private Keys

- The keys K_E and K_D are mathematically related
- A plaintext encrypted with K_E can be decrypted only with K_D and vice versa
  - Does not matter which one you choose to call public key / private key

Property of the Keys

- Knowing the public-key and public description of the cipher, it is
  - Computationally infeasible to compute the private key (K_D) (an NP-time problem)
  - Thus the public-key may be distributed to anyone wishing to communicate securely with its owner
    - Although proper distribution of the public-key is a non-trivial problem - the key distribution problem

Using Public Key Cryptography

Confidentiality For Small Payload (One Way)

- Look up the recipient's public key
- Encrypt the payload with the recipient's public key and send on an unprotected network
- The recipient will receive and decrypt the message with their private key

Confidentiality For Small Payload (Two Way)

- Look up the recipient's public key
- Encrypt the following with the recipient's public key and send on an unprotected network
  - The payload
  - Your public key[1]
- The recipient will receive and decrypt the message and your public key with their private key and encrypt their response with your public key
- When you receive the response, decrypt it with your private key

[1] Could have recipient look up originator's public key

Confidentiality For A Session

- Look up the recipient's public key
- Encrypt the following with the recipient's public key and send on an unprotected network:
  - Your public key
  - Your part of a session key
- The recipient will decrypt the message, combine your session key part with their session key part, and encrypt this with your public key
- When you receive the response, decrypt it with your private key and begin the private key session

Digital Signatures

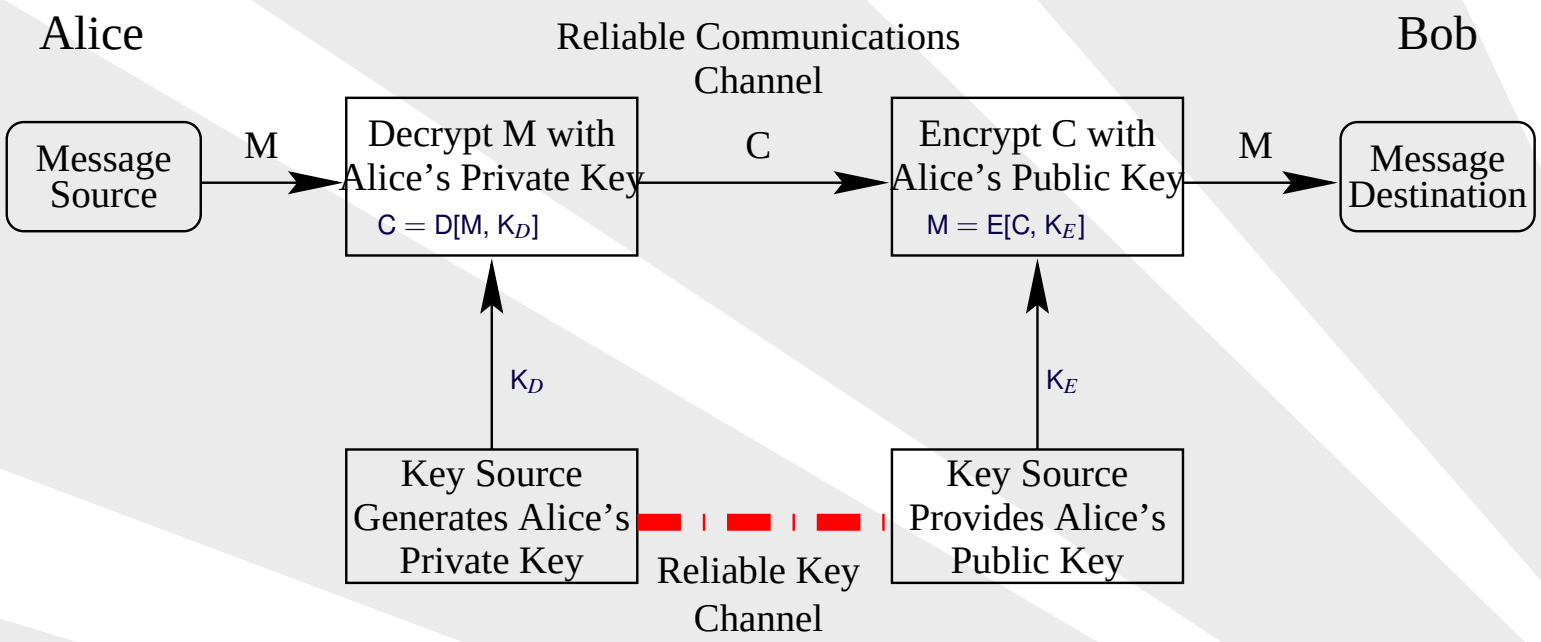

Signature and Non Repudiation

- A signature is a non repudiable proof assuming that a one-to-one mapping can be established between a public key and its owner
- In general non-repudiation requires a notarized signature, involving a third party, that vouches for the one-to-one mapping between a public key and its owner
- In large systems this can involve hierarchies of notarization